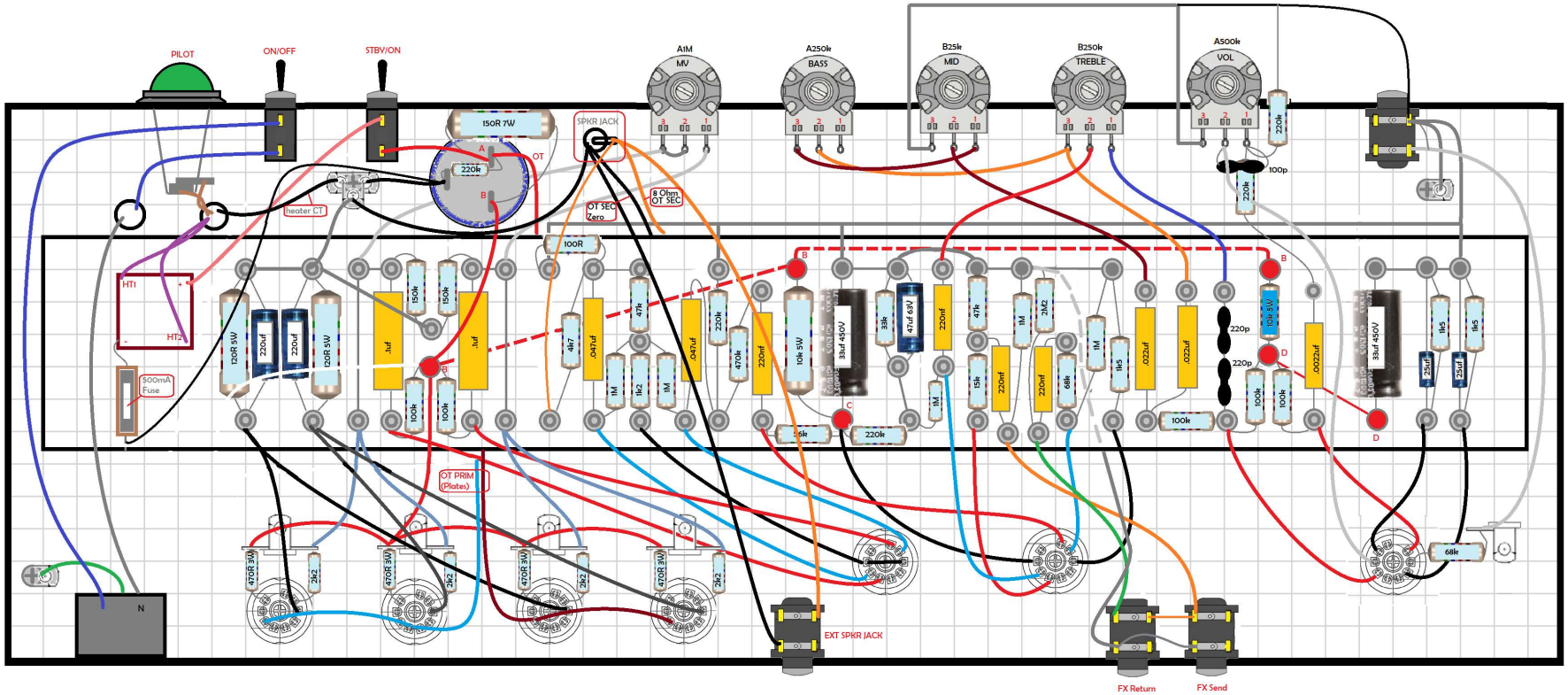
PILOT
ON/OFF
STBY/ON
A1M
MV
A250k
BASS
B25k
MID
B250k
TREBLE
A500k
VOL
150R 7W
220k
OT
SPKR JACK
8 Ohm
OT SEC
OT SEC
Zero
heater CT
100R
HT1
HT2
500mA
Fuse
120R 5W
220uf
220uf
120R 5W
.1uf
150k
150k
.1uf
100k
100k
4k7
.047uf
1M
1k2
1M
47k
.047uf
220k
470k
220nf
10k 5W
33uf 450V
33k
47uf 63V
220nf
47k
15k
220nf
1M
2M2
220nf
68k
1M
1k5
.022uf
.022uf
100k
220p
220p
10k 5V
100k
100k
.0022uf
33uf 450V
25uf
25uf
1k5
1k5
68k
470R 3W
2k2
470R 3W
2k2
470R 3W
2k2
470R 3W
2k2
OT PRIM
(Plates)
EXT SPKR JACK
FX Return
FX Send
N