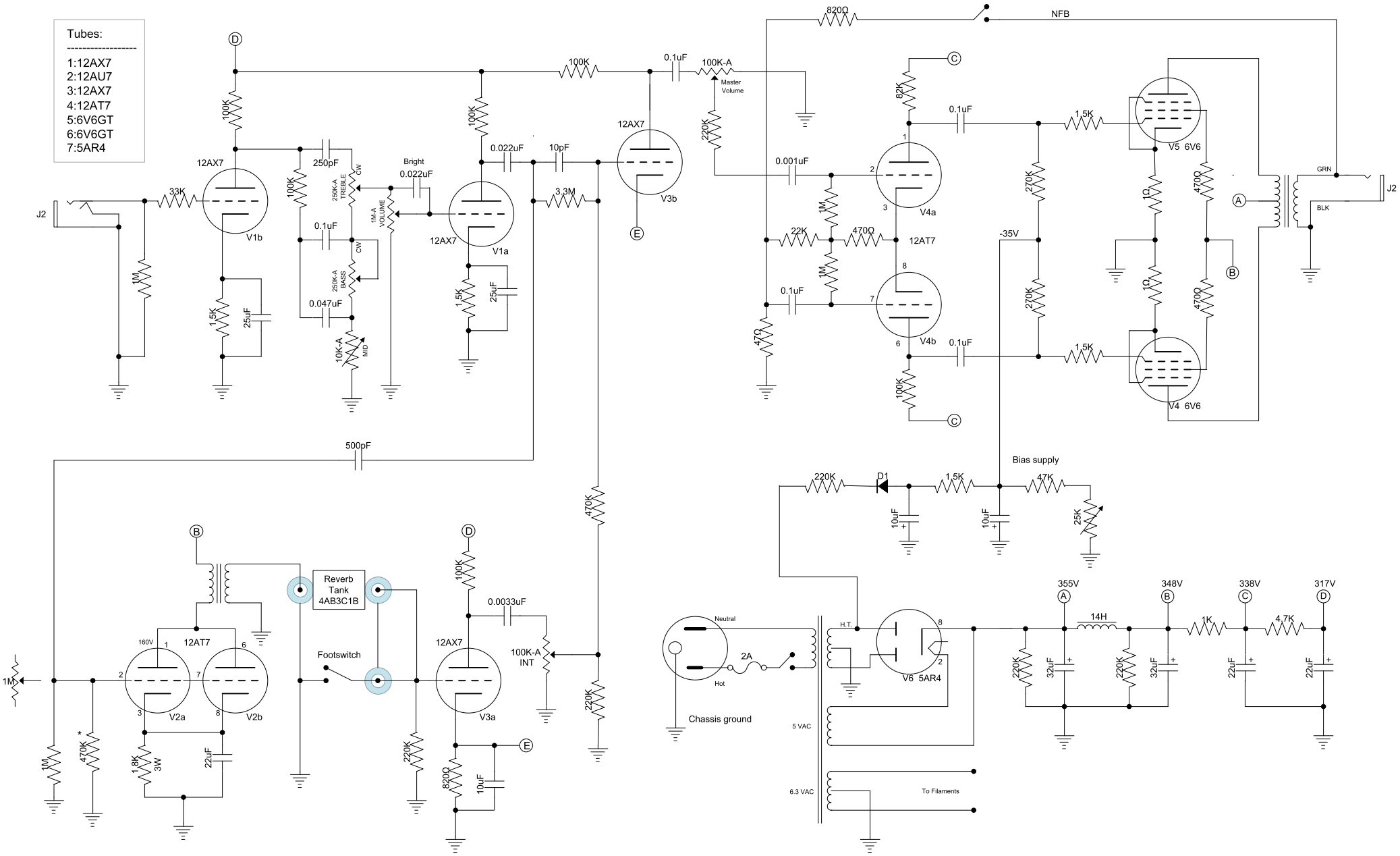# Deluxe Reverb AB763 - One Channel No Tremolo