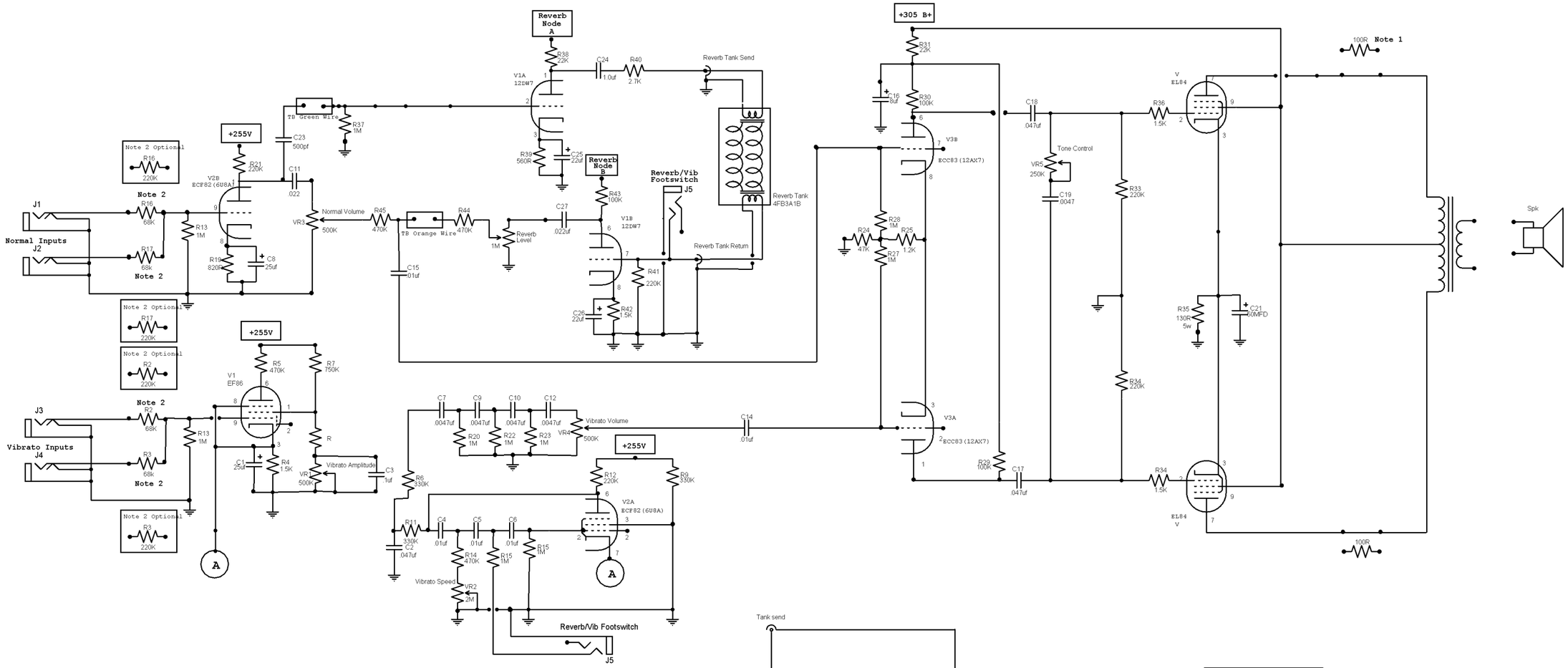

Note 1: Optional. Original AC10 had 100R resistors. Omit for AC15 Output.

Note 2: Original AC10 had 220K. Optional to use 68K like AC15.

John's Goofy Amp		
AC10 w/ Reverb		
John Almeida	Rev 3 2022-10-19	Page #