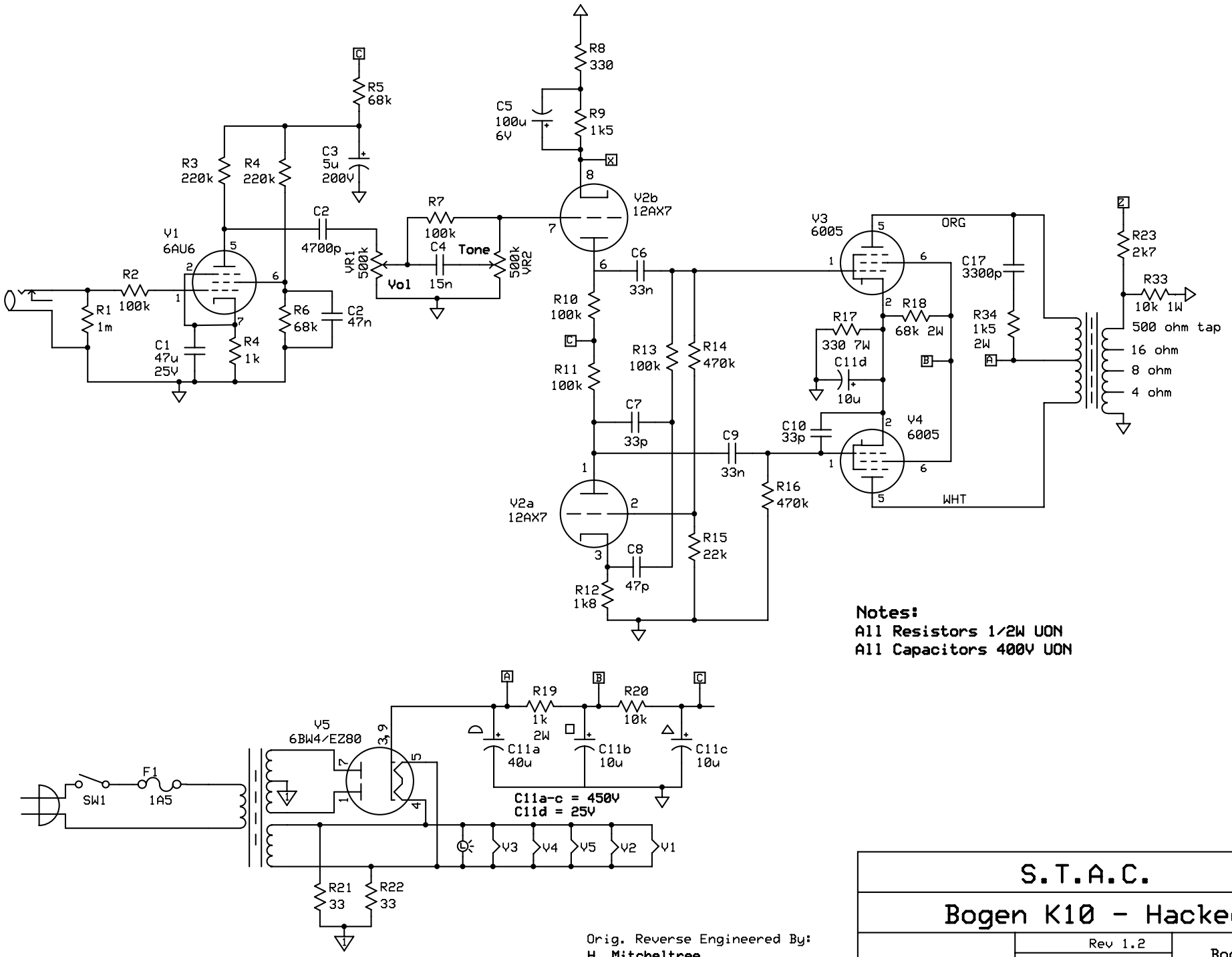
R5 68k
C3 5u 200V
R3 220k
R4 220k
C2 4700p
V1 6AU6
R2 100k
R1 1m
C1 47u 25V
R4 1k
R6 68k
C2 47n
R7 100k
C4 15n
Tone
VR1 500k
Vol
500k VR2
R8 330
C5 100u 6V
R9 1k5
V2b 12AX7
C6 33n
R10 100k
R11 100k
R13 100k
R14 470k
C7 33p
C9 33n
R16 470k
V2a 12AX7
R15 22k
C8 47p
R12 1k8
V3 6005
ORG
C17 3300p
R17 330 7W
R18 68k 2W
C11d 10u
C10 33p
V4 6005
WHT
R34 1k5 2W
R23 2k7
R33 10k 1W
500 ohm tap
16 ohm
8 ohm
4 ohm
Notes:
All Resistors 1/2W UON
All Capacitors 400V UON
V5 6BW4/EZ80
SW1
F1 1A5
R19 1k 2W
R20 10k
C11a 40u
C11b 10u
C11c 10u
C11a-c = 450V
C11d = 25V
V3
V4
V5
V2
V1
R21 33
R22 33
Orig. Reverse Engineered By:
H. Mitcheltree
S.T.A.C.
Bogen K10 - Hacked
Rev 1.2
8/7/2009
Boom!