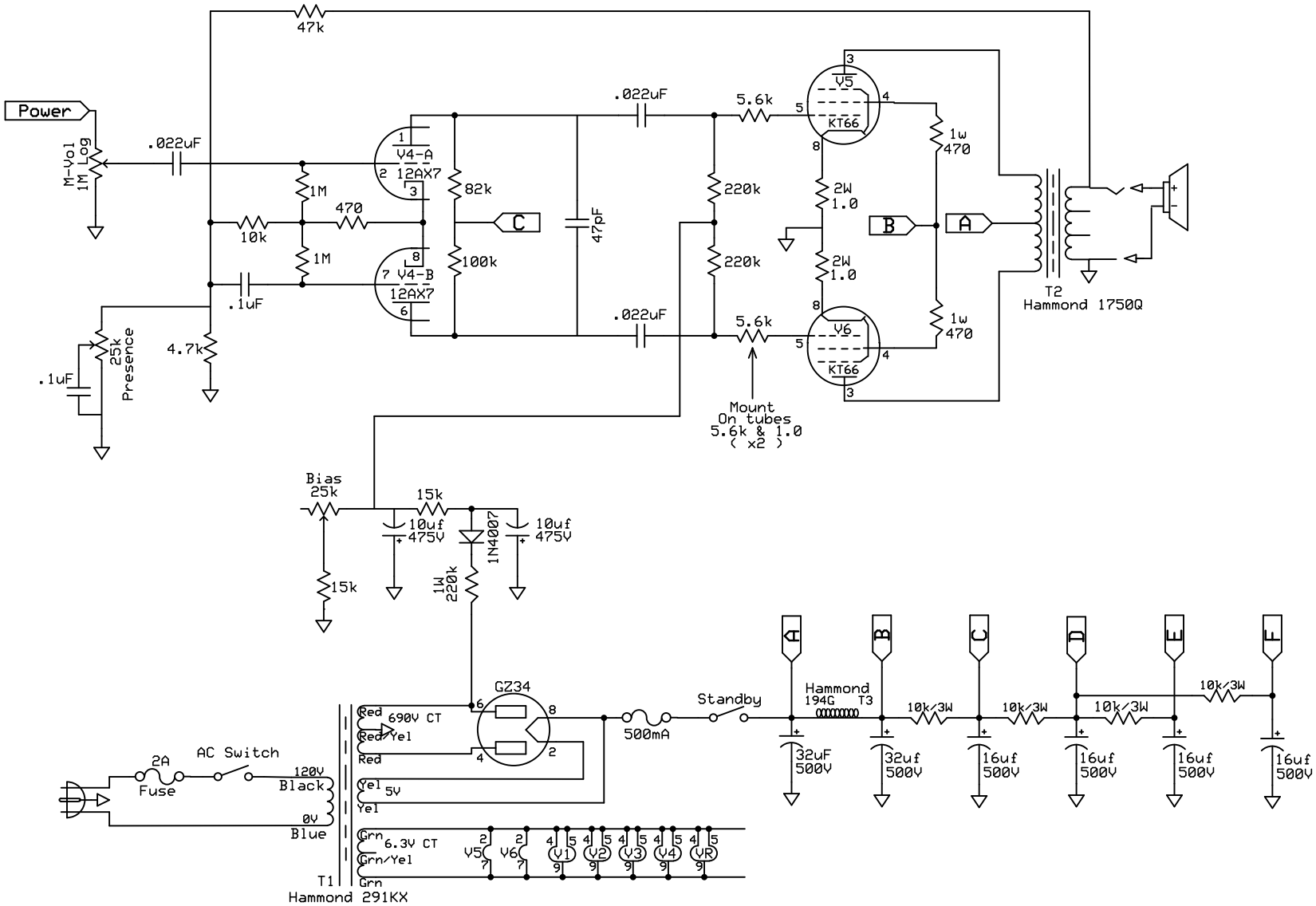

RoadShow		
Dual 2203-JTM45		
Bill Anderson	Rev 1.0 11/11/2022	Power Section