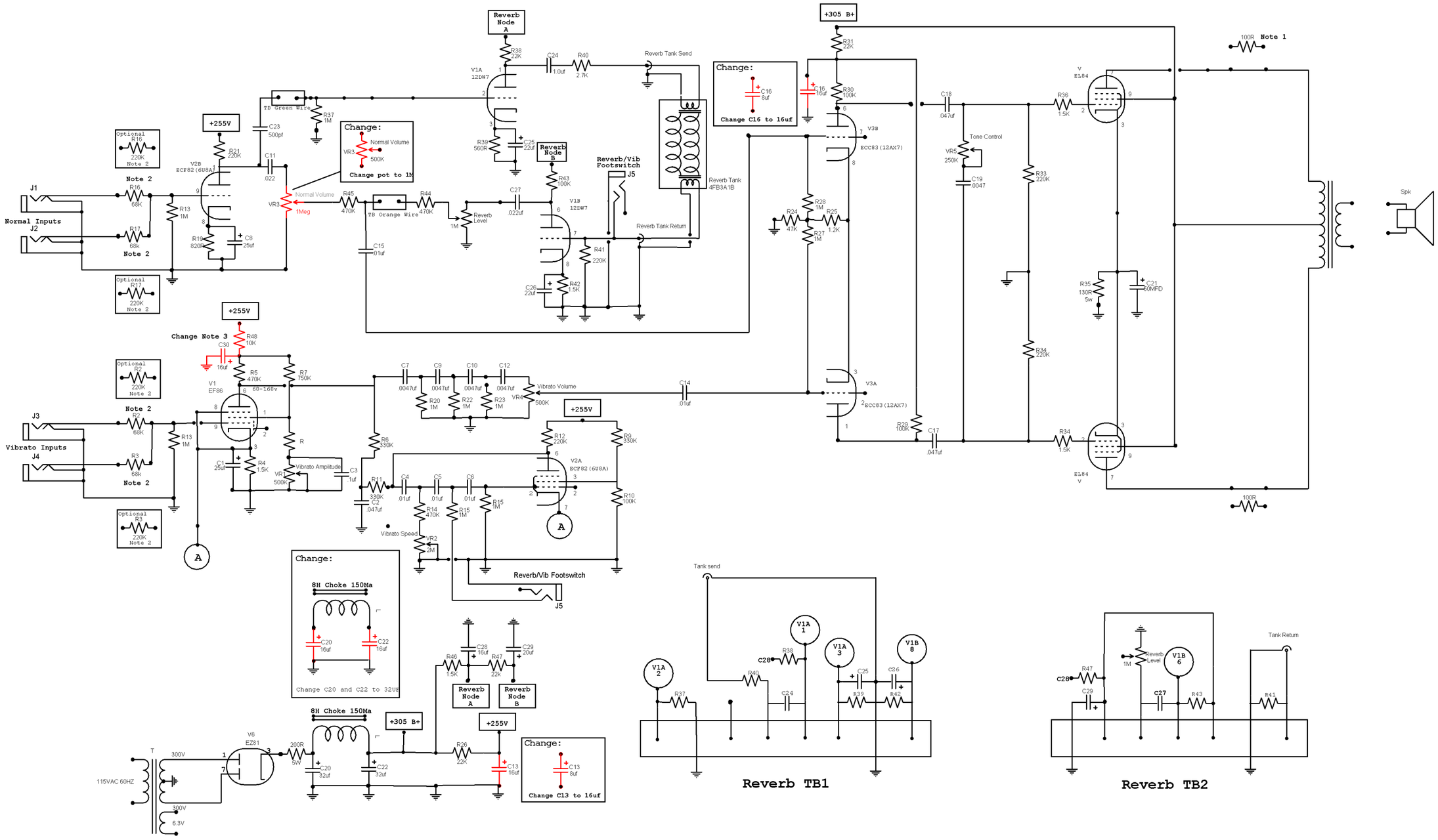


Note 1: Optional. Original AC10 had 100R resistors. Omit for AC15 Output.
Note 2: Original AC10 had 220K. Optional to use 68K like AC15.
Note 3:

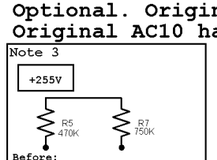


| | | |
|---|---|---|
| John's Goofy Amp | | |
| AC10 w/ Reverb | | |
| John Almeida | Rev 8<br>2022-10-19 | Page # |