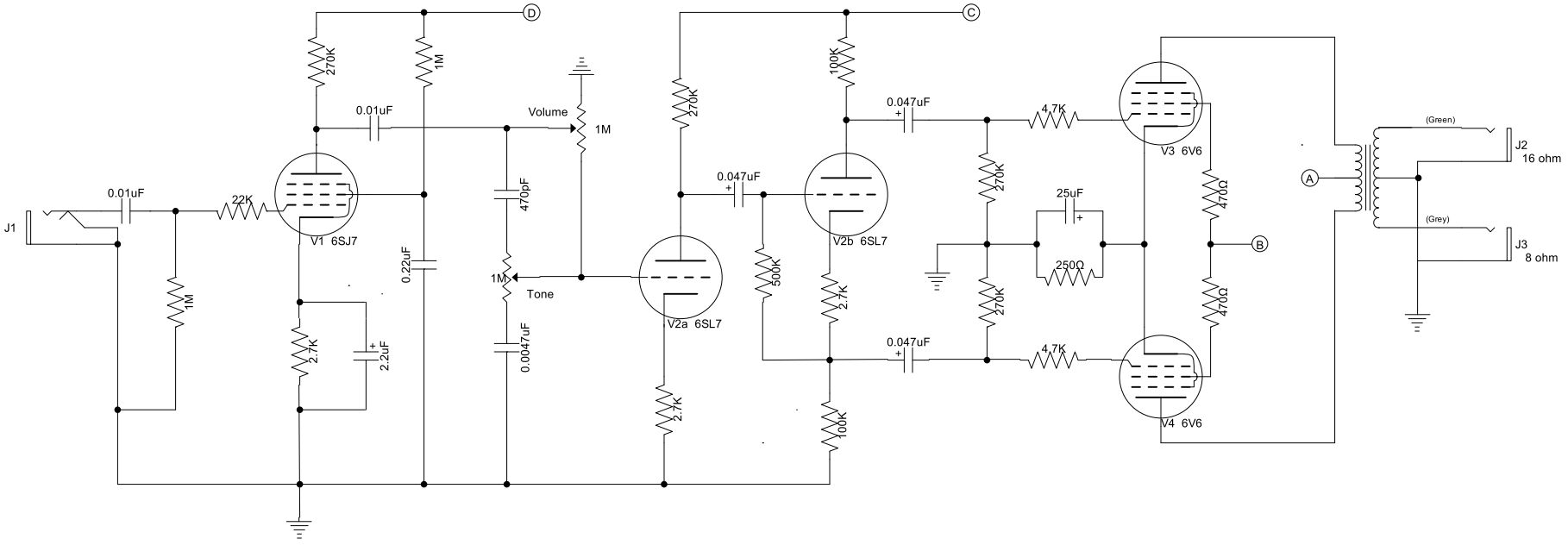
D
C
270K
1M
0.01uF
Volume
1M
270K
100K
0.047uF
4.7K
(Green)
J2
16 ohm
0.01uF
22K
J1
V1 6SJ7
470pF
0.047uF
V2b 6SL7
270K
25uF
250Ω
470Ω
A
B
(Grey)
J3
8 ohm
1M
0.22uF
1M
Tone
500K
2.7K
V2a 6SL7
270K
470Ω
1M
2.7K
2.2uF
0.0047uF
0.047uF
4.7K
V3 6V6
V4 6V6
2.7K
100K

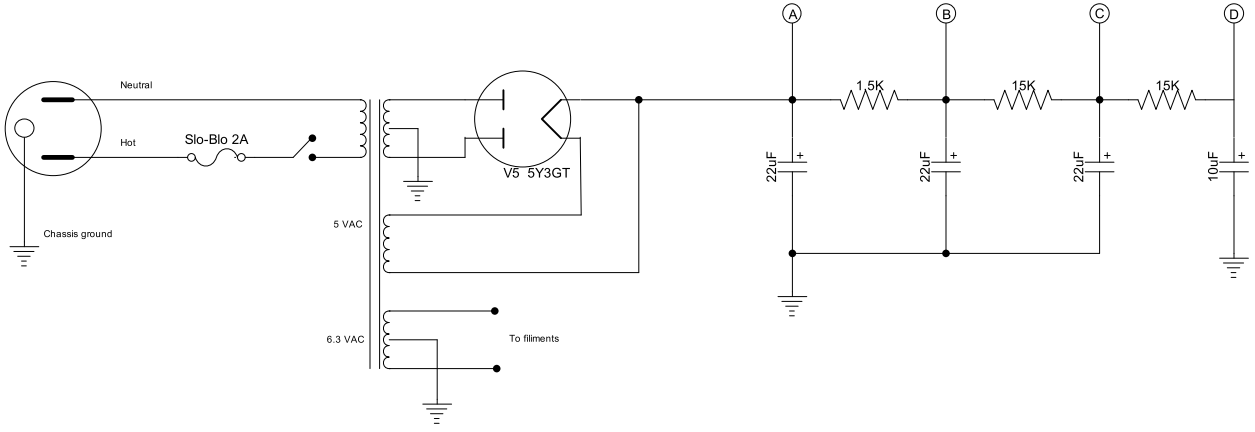
Neutral
Hot
Slo-Blo 2A
Chassis ground
V5 5Y3GT
5 VAC
6.3 VAC
To filiments
A
B
C
D
1.5K
15K
15K
22uF
22uF
22uF
10uF