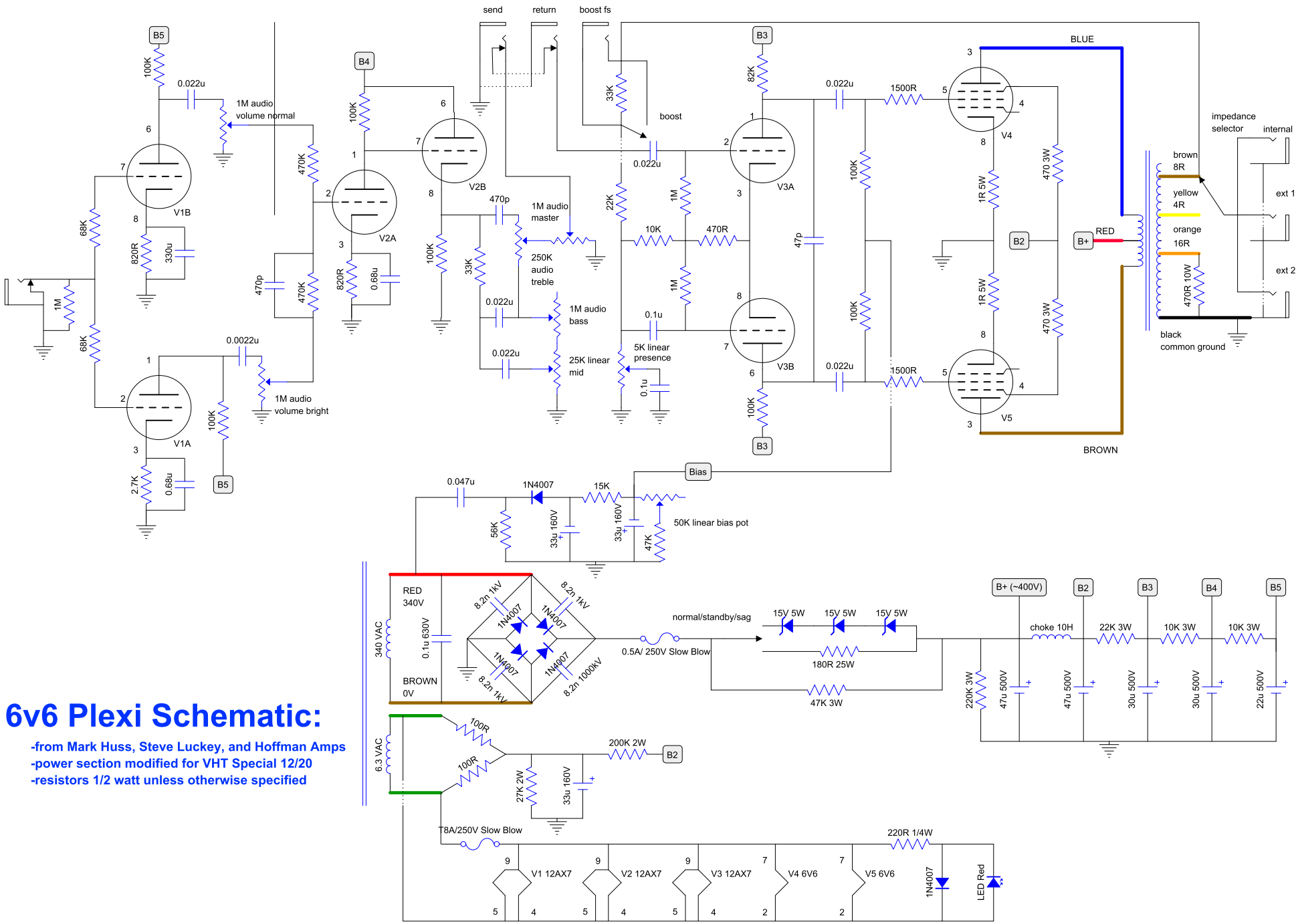

6v6 Plexi Schematic:

-from Mark Huss, Steve Luckey, and Hoffman Amps
-power section modified for VHT Special 12/20
-resistors 1/2 watt unless otherwise specified