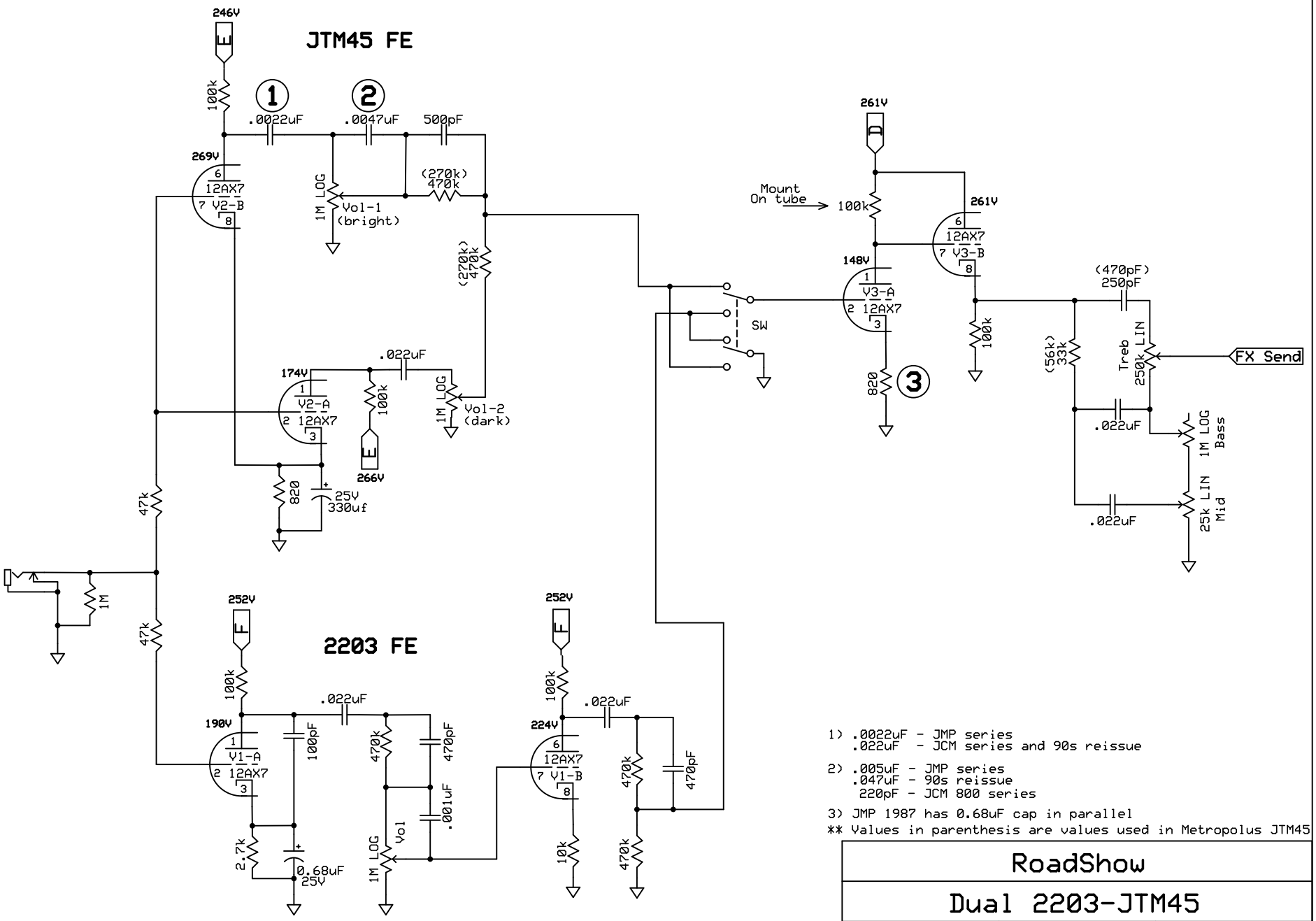

1) .0022uF - JMP series
   .022uF - JCM series and 90s reissue

2) .005uF - JMP series
   .047uF - 90s reissue
   220pF - JCM 800 series

3) JMP 1987 has 0.68uF cap in parallel

** Values in parenthesis are values used in Metropolus JTM45

RoadShow		
Dual 2203-JTM45		
Bill Anderson	Rev 1.0 12/04/2022	Front End