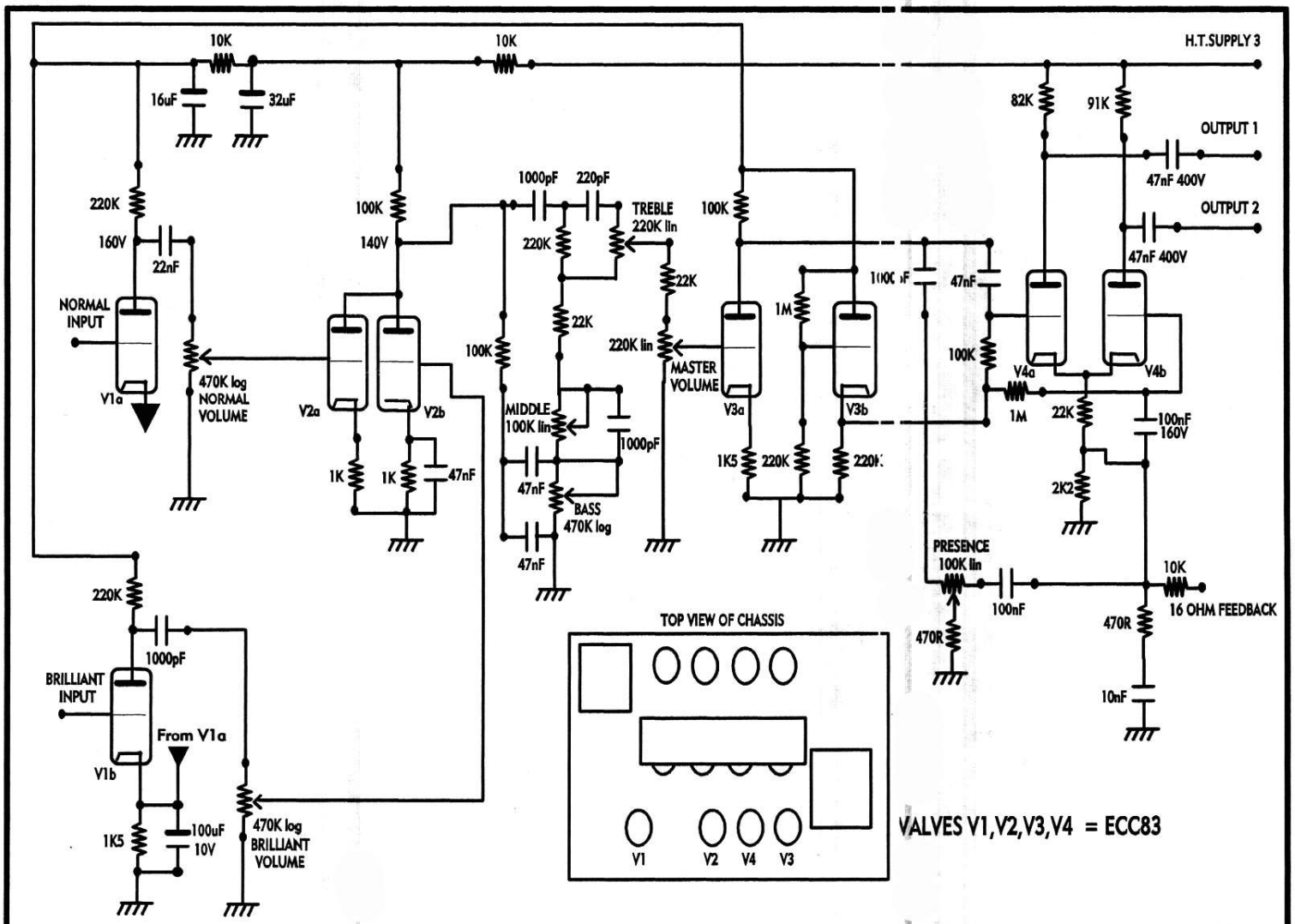

HIWATT DR103 PREAMPLIFIER CIRCUIT DIAGRAM Drawn 19/05/95 Issue 4. S/No. AB0309 Onwards