HOT ROD DELUXE

SERVICE MANUAL

CONTENTS:

Notices
Specifications
Parts lists:
- PCB assembly
- Chassis assembly
- Cabinet assembly
- Footswitch assembly
- Miscellaneous

Schematics/diagrams

Fender Musical Instruments Corp. 7975 North Hayden Road Scottsdale, AZ 85258

HOT ROD DELUXE

(This is the model name for warranty claims)

SERVICE MANUAL

SEPTEMBER 1996

IMPORTANT NOTICE:

The information contained herein is CONFIDENTIAL and PROPRIETARY to Fender Musical Instruments Corp. It is disclosed solely for use by qualified technicians for purposes of equipment maintenance and service. It is not to be disclosed to others without the expressed permission of Fender Musical Instruments Co. All specifications subject to change without notice.

For warranty repair service, only Fender specified part numbers are to be used. It is recommended they also be used for post-warranty maintenance and repair.

Parts marked with an asterisk (*) indicate the required use of that specific part. This is necessary for RELIABILITY and SAFETY requirements. **DO NOT USE A SUBSTITUTE!**

A coded naming convention is used in the description of certain parts. The codes and what they mean are as follows:

CAPACITOR CODES

CAP AE	=	Aluminum Electrolytic
CAP CA	=	Ceramic Axial
CAP CD	=	Ceramic Disk
CAP MPF	=	Metalized Polyester Film
CAP MY	=	Mylar
CAP PFF	=	Polyester Film/Foil

RESISTOR CODES

RES CC	=	Carbon Comp
RES CF	=	Carbon Film
RES FP	=	Flame Proof
RES MF	=	Metal Film
RES WW	=	Wire Wound

HARDWARE CODES

BLX	=	Black Oxide
CR	=	Chrome Plated
HWH	=	Hex Washer Head
M	=	Machine Screw
NI	=	Nickel Plated
OHP	=	Oval Head Phillips
PB	=	Particle Board
PHP	=	Pan Head Phillips
PHPS	=	Pan Head Phillips Sems
SMA	=	Sheet Metal "A" Point
SMB	=	Sheet Metal "B" Point
SS	=	Stainless Steel
TF	=	Thread Forming
ZI	=	Zinc Plated

HOT ROD DELUXE
SPECIFICATIONS

Product Release No.:	PR 246 *(This is not a model number)*	
Input Impedance:	Input 1:	1MΩ
	Input 2:	136kΩ
Power output:	40 Watts RMS into 8 or 4 Ω @ 5% THD	
Preamp Out Output Impedance:	1.5kΩ max	
Power Amp in Sensitivity:	200mV for clipping	
Power Amp in Input Impedance:	54kΩ	
Dimensions:	Height: 18.75"	(47.6 cm)
	Width: 23.5"	(59.7 cm)
	Depth: 10.5"	(26.7 cm)
Weight:	49.5 lbs.	(22.5 kg)

Product specifications are subject to change without notice

PARTS LIST

PRINTED CIRCUIT BOARD ASSEMBLY

QTY	PART #	DESCRIPTION	REFERENCE DESIGNATION
1	050400003	PCB ASSY H/R DELUXE	STUFFED
3	028104	BUTTON PUSH SWITCH BLACK	@S1,2,3
1	050688	CABLE JMPR 2 CKT .156 ROUND	
3	050687	CABLE JMPR 6 CKT .156 ROUND	
10	41311	CABLE REVERB	@U2
4	038689001	CAP AE AX 47uF 100V	C12,16,19,20
1	038690001	CAP AE AX 1.0uF 100V	C8
5	009512	CAP AE AX 22uF 25V 20%	C9,14,21,49,50
2	036954	CAP AE RDL 22uF 63V 20%	C38,45
3	024819	CAP AE AX 22uF 500V	C33,35,36
1	038693001	CAP AE AX 47uF 16V	C1
1	041589	CAP AE AX 47uF 500V 20%	C31
3	031040	CAP AE RDL 100uF 100V 20%	C40,41
1	038698001	CAP CA 47PF 100V	C15
2	020909	CAP CD 47PF 1000V 10%	C28,30
2	020917	CAP CD 250PF 1000V 10%	C3,7
1	025986	CAP CD 390PF 1000V 10%	C11
1	038701001	CAP CA 470PF 50V	C13
1	025995	CAP CD 8200PF 1KV 20%	C53
2	038703001	CAP CA .1uF 50V	C54,55
1	027255	CAP MPF .001uF 100V	C22
1	027262	CAP MPF .0068uF 100V	C4,44
3	024833	CAP MPF RDL .022uF 400V 10%	C6,18,24
2	024845	CAP MPF RDL .047uF 400V 10%	C2,10
2	027275	CAP MPF .068uF 100V	C4,44

HOT ROD DELUXE

PRINTED CIRCUIT BOARD ASSEMBLY (CONT)

QTY	PART #	DESCRIPTION	REFERENCE DESIGNATION
1	027278	CAP MPF .1uF 63V 10%	C29
1	024853	CAP MPF RDL .1uF 250V 10%	C25
1	024854	CAP MPF RDL .1uF 400V 10%	C5
2	024855	CAP MPF RDL .1uF 630V 10%	C26,27
2	027281	CAP MPF .47uF 63V	C17,48,51
1	047065	CAP PFF .0015uF 400V 10%	C23
1	047031	CONTROL SNAPIN 25K 30C	R67 PRESENCE
1	027873	CONTROL PCB MT LIN 30% 25K	R82 BIAS ADJUST
2	041510	CONTROL SNAPIN 25K B	R15,39 MIDDLE, REVERB
1	037600	CONTROL SNAPIN 100K B	R26 MASTER
3	047540	CONTROL SNAPIN 250K 15A	R6,7,14 VOLUME, DRIVE, BASS
1	037597	CONTROL SNAPIN 250K 30A	R13 TREBLE
8	026730001	DIODE 1N4006 800V	CR3,6-9,11,12,15
8	006260	DIODE 1N4448 SIGNAL	CR16,18,20,21,23-25,27
2	029690001	DIODE HV 3KV 200mA	CR4,5
1	027329001	DIODE ZEN 1N5228V 3.9V 5%	CR19
2	031729001	DIODE ZEN 1N5231V 5W 5.1V 5%	CR17,22
2	031635001	DIODE ZEN 1V5245B 10V 5%	CR26,28
2	031019001	DIODE ZEN 1N5245V .5W 15V 5%	CR1,2
2	028119	DIODE ZEN 1N5353V 16V 5W 5%	CR13,14
19	025802	FSTM TAB ,A;E .250X.032 PCB MT	CP1-16, 18-20
2	016795	IC DUAL OP AMP TLO72	U1,2
1	031611	IC DUAL OP AMP PC4560	U3
1	031570	JACK PHONE PCB STEREO PREMIUM	J4 POWER AMP IN
4	037036	JACK PHONE PCB MONO CA PREMIUM	J1,2,3,5 INPUTS, PREOUT, FTSW
60	020888	JUMPER WIRE 22GA	
1	033177	LED RED/GREEN 5X5mm BI-COLOR	LD1
2	031901	PIN MALE PCB .093 DIA	SP1,2
2	036613	RELAY DPDT DIP 24 VOLT 8.3mA	K1,2
1	024937001	RES CF 1/4W 5% 10OHM	R63
3	024947001	RES CF 1/4W 5% 47OHM	R34,99,100
1	028015001	RES CF 1/4W 5% 130OHM	R84
2	024957001	RES CF 1/4W 5% 270OHM	R85,104
1	024961001	RES CF 1/4W 5% 470OHM	R55
9	024969001	RES CF 1/4W 5% 1.5K	R5,10,17,21,31,64,65,76,103
1	024970001	RES CF 1/4W 5% 1.8K	R88
4	02497200	RES CF 1/4W 5% 2.7K	R29,37,49,50
2	024977001	RES CF 1/4W 5% 4.7K	R33,68
6	024981001	RES CF 1/4W 5% 10K	R41,46,90,91,93,94
3	024988001	RES CF 1/4W 5% 27K	R86,98,101
4	024993001	RES CF 1/4W 5% 47K	R28,45,51,69
2	028990001	RES CF 1/4W 5% 51K	R47,48
2	024995001	RES CF 1/4W 5% 68K	R1,2
10	024997001	RES CF 1/4W 5% 100K	R8,20,23,24,25,30,35,43,77,87
2	028955001	RES CF 1/4W 5% 130K	R12,18
2	025058001	RES CF 1/4W 5% 180K	R44,52
7	025059001	RES CF 1/4W 5% 220K	R9,19,36,40,59,60,105
3	025065001	RES CF 1/4W 5% 470K	R38,95,96
9	025069001	RES CF 1/4W 5% 1M	R3,27,32,42,53,54,89,92,102
2	026368001	RES CF 1/2W 5% 100OHM	R80,81
1	025115001	RES CF 1/2W 5% 82K	R57
5	025116001	RES CF 1/2W 5% 100K	R4,11,16,22,58
1	033095001	RES MOX FP 1W 5% 1OHM	R66
2	036468001	RES MOX FP 1W 470 OHM	R61,62
1	036469001	RES MOX FP W1 5% 4.7K	R74
1	036621001	RES CF 1W 5% 6.8K	R56
1	036470001	RES MOX FP 1W 5% 10K	R75
1	041269	RES CF 2W 5% 1.2L	R97
2	041256	RES WW BT 5W 10% 470OHM R78,79	R78,79
4	014999	SCRW M 6-32X1/4 PHP ZI	@XV4,5
13	039367	SCRW M 6-32X3/8 PHPS SS ITLW	PCB MOUNT
1	036178	SPACER LED .5X.1 BRN	@LD1
13	016440	STNDOFF RND AL 6-32X1X1/4	PCB MOUNT
3	028091	SWITCH PUSH SLFLK SHORT STROKE	S1,2,3

HOT ROD DELUXE

PRINTED CIRCUIT BOARD ASSEMBLY (CONT)

QTY	PART #	DESCRIPTION	REFERENCE DESIGNATION
1	028503	THERMISTOR 10 OHM 5A C60-11	TH1
3	029167	TUBE SOCKET 9 PIN PCB MOUNT	XV1,2,3
2	029343	TUBE SOCKET 8 PIN PCB MOUNT	XV4,5
2	014689	XSTR N-CH JFET J111 TO-92	Q1,2
1	016739	XSTR NPN 2N4401 TO-92	Q4
1	016742	XSTR PNP 2N4403 TO-92	Q3

CHASSIS ASSEMBLY

QTY	PART #	DESCRIPTION	REFERENCE DESIGNATION
1	026038	BUSHING SR .625X.062X37/64 BLK	@ PWR CABLE 100V,120V,AUSTRALIA
1	010401	BUSHING SR .625X.125X37/64 WHT	@ PWR CABLE 230V, UNITED KINGDOM
1	026116	BUSHING SR .500X.063X7/16 BLK	
1	026541	CABLE ASSY PWR W/.250 TAB .120V	
1	048463	CABLE ASSY PWR .250TAV 100V	(POWER CABLE 100V ONLY)
1	033331	CABLE ASSY PWR 220/240V	(POWER CABLE 230V ONLY)
1	038602	CABLE ASSY PWR AUST .250 TAB	(PWR CABLE AUSTRALIA 240V)
1	040993	CABLE ASSY PWR 5A U.K. .250TAB	(PCABLE UNITED KINGDOM 240V)
1	022707	CHOKE FILTER	L1
1	032219	COLLAR PILOT LIGHT	
1	077982	FUSE QA 1-1/4X1/4 250V 3A	F1 100V/120V ONLY
1	020793	FUSE QA 20mmX5mm 250V 1.6A	F1 220V/230V/240V ONLY
1	036702	FUSE HOLDER 3AG FINGER GRIP	100V/120V ONLY
1	036703	FUSE HOLDER 5MM FINGER GRIP	230V, AUSTRALIA, UK
1	021741	HOLDER DIAL LITE ASSEMBLY PILOT	
1	021550	JACK PHONE TIP SHUNT 12A	J7 SPEAKER OUT JACK
1	041701	JACK PHONE TRANSFER 13A	J6 EXT. SPEAKER JACK
1	025718	JEWEL PILOT LITE RED #20	
8	036620	KNOB “CHICKEN HEAD	
1	031625	NUT HOLDER PILOT LITE 1/16-27	
8	022004	NUT KEPS #8-32 ZINC	
2	016352	NUT HEX 3/5-32X3/32 TK NI	
1	050403	PANEL TOP CHRM H/R DVL/DLX	
1	021642	PILOT LIGHT #T47	BULB
21	031184	SCRW M 6-32X1/4 PHPS BLX ITLW	
4	038900	SCRW TF 6-32X1/4 PHP ZI	
4	016473	SCRW M 8-32X1/2 PHP ZI	
6	016440	STNDOFF RND AL 6-32X1X1/4	
1	036570	SWITCH TOGGLE DPST W/NUTS	S4 POWER SWITCH
1	037039	SWITCH TOGGLE DPST W/NUTS	S5 STANDBY SWITCH
3	013341	TIBE 7025/12AX7WA RUSSIAN MADE	V1,2,3
2	039214	TUBE 5881/6L6WGC	V4,5
2	020424	TUBE RING UNIVERSAL (277h-2)	@V4,5
7	9904300920	WASHER FLAT 482X.709NI	
2	9904300100	WASHER LCK INTL 3/8X.681X.032	
1	036958	XFMR POWER DOM BLUES DLX/VIBVB	T2 120V ONLY
1	041753	XFMR PWR ’93 CONCERT/SUPER EXP	T2 100V/115V/230V
1	050438	XFMR AUDIO OUTPUT 40W	T1

CABINET ASSEMBLY

QTY	PART #	DESCRIPTION	REFERENCE DESIGNATION
1	050681	CAB ASSY HR DLX BLK/SLVR	
1	038566	CABLE ASSY SPKR RT ANG 13-1/2”	SPEAKER CABLE
1	012582	CLAMP CABLE NYL SCRW MNT ¼	
0.38	037788	CLOTH GRILLE BLACK/SILVER	
4	024653	GLIDE CABINET NICKEL PLATED	NO INSERT
1	049094	HANDLE MOLDED BLACK	
4	022483	INSERT GLIDE CUSHION 1.02 DIA.	RUBBERONLY
6	069393	NUT 6-32 HEX EXT LOCK	GRILLE/BAFFLE MOUNT
4	064162	NUT T 8-32X1/2 STR 3 PRNG BLX	HANDLE MOUNT
4	021972	NUT T 10-32X3/4 STR 3 PRNG BLX	SPEAKER MOUNT
4	036650	PIN ESCUTCHEON #18X3/8 NI	LOGO MOUNT
1	031849	REVERB BAG	BAG ONLY

HOT ROD DELUXE

CABINET ASSEMBLY (CONT)

QTY	PART #	DESCRIPTION	REFERENCE DESIGNATION
1	050394	REVERB UNIT 4 SPRING 4EB3C1B	PAN
5	050858	SCRW M 6-32X1-3/4 TJ[OTFW MO	
4	037247	SCRW M 8-32X1 OHP NI	
4	026625	SCRW WOOD 8X1 FH	GLIDE MOUNT
4	047821	SCRW M 10-32X3/4 THP STL BLX	SPEAKER MOUNT
6	015990	SCRW M 10-32X3/4 THP NI	BACK BOARD MOUNT
6	036619	SCREW M 10-32X1-1/2 THP NI	CHASSIS MOUNT
1	037617	SPEAKER 12" 8 PHM 50 WATTS (for pre 2006 models only/prior authorization from Fender amp techs only)	
1	071298	SPEAKER 12 INCH 8 OHM (for 2006 - current models/no prior authorization needed)	
6	022327	WSHR FLAT 8X7/16 NI	

FOOTSWITCH ASSEMBLY

QTY	PART #	DESCRIPTION	REFERENCE DESIGNATION
1	050419	FOOTSWITCH 2 BTN CH/DRV/MDRV	COMPLETE FOOTSWITCH
4	006260	DIODE 1N4448/1N914B SIGNAL	CR1,2,4,5
1	027329	DIODE ZEN 1N4448/1N914B 3.9V .5W 5%	CR3
1	031871	LED BI-COLOR 5X5mm	LD2
1	028039	LED RED 5X5mm SLV-55VR3	LD1
1	037036	JACK PHONE PCB MONO CA PREMIUM	J1
1	029687	RES CF 1/4W 5% 75 OHM	R1
2	028714	SWITCH PUSH SPDT	S1,2

MISCELLANEOUS

QTY	PART #	DESCRIPTION	REFERENCE DESIGNATION
	050405	MANUAL OWNER H/R DELUXE	
	050398	SCHEMATIC REDUCED W/ SD H/R DLX	

REVISIONS				
ZONE	REV.	DESCRIPTION	DATE	APPROVED
	A	RELEASED PR325	13-MAY-96	MDW
	B	EC 1701	24-MAY-96	MDW

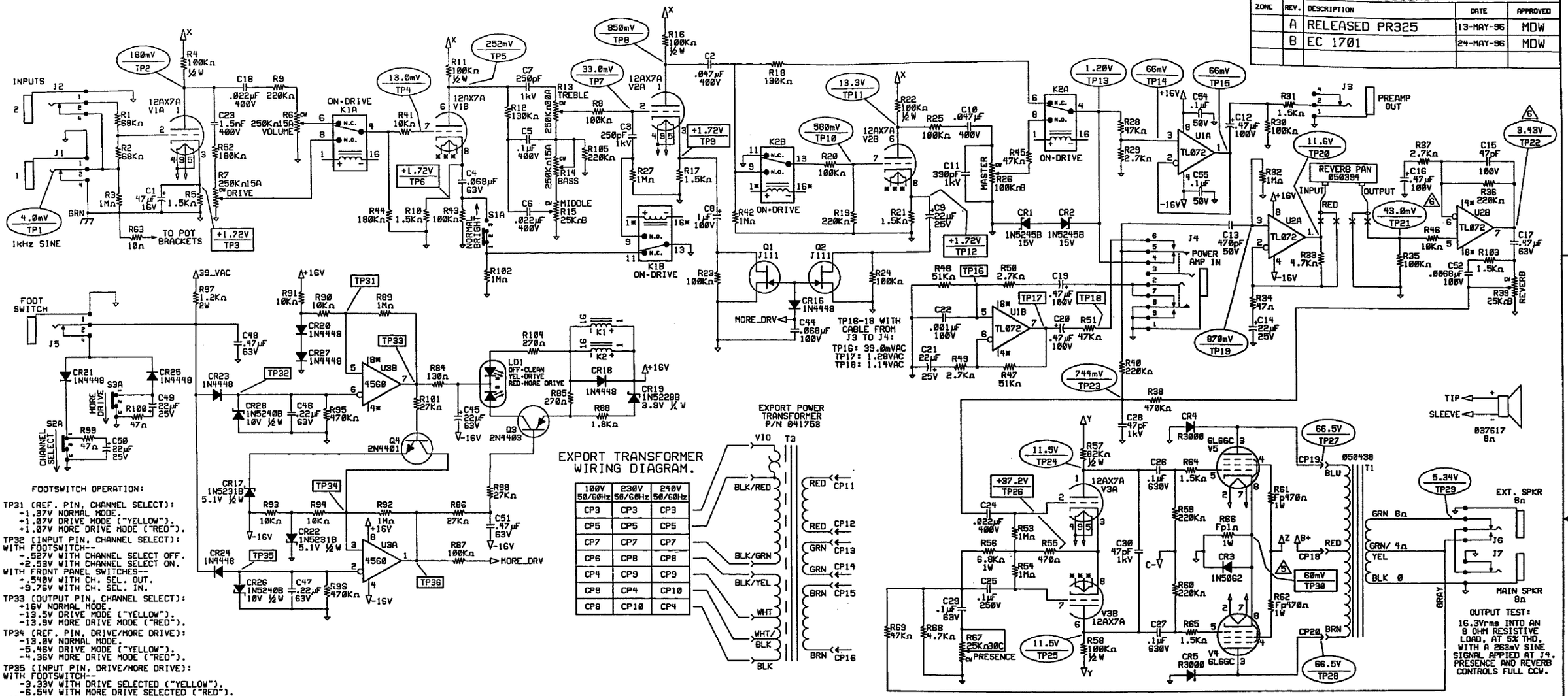

NOTES: (UNLESS SPECIFIED OTHERWISE)

1.) LAST INSTANCES: C55 CP20 CR28 F1 J7 K2 L1 LA1 LD1 Q4 R105 S5 T2 TH1 V3 V5

2.) SIX DIGIT NUMBERS ARE FENDER PART NUMBERS.

3.) ALL RESISTORS 1/4W 5% CARBON FILM.

4.) ALL VOLTAGES MEASURED WITH RESPECT TO GROUND USING A TRUE RMS DVM OF 1MΩ AC INPUT IMPEDANCE AND OF 10MΩ DC INPUT IMPEDANCE. VOLTAGES MAY VARY ±20%. TEST CONDITIONS:
LINE VOLTAGE 120VAC 60Hz.
ALL DC AND SUPPLY MEASUREMENTS MADE WITH NO INPUT SIGNAL.
REVERB CONTROL AT FULL CCW.
ALL OTHER CONTROLS AT 50% ROTATION.
NORMAL BRIGHT SWITCH OUT.
DRIVE ("YELLOW") MODE SELECTED.
BIAS SET TO 30mA PER OUTPUT TUBE. SEE NOTE 5.

5.) BIAS ADJUSTMENT - NO SIGNAL APPLIED, RATED LINE VOLTAGE AT T2 POWER TRANSFORMER PRIMARY:
SET BIAS ADJUST POT R82 TO OBTAIN A READING OF +60mV AT TP30. VOLTAGE SHOWN AT BIAS POT WIPER IS FOR REFERENCE ONLY.

6.) READINGS OBSERVED AT TP21 AND TP22 WILL VARY GREATLY DEPENDING ON INDIVIDUAL REVERB PAN RESPONSE. THE VOLTAGE GAIN AT U2B SHOULD BE 82.

7.) COLORS IN PARENTHESES ARE FOR 230V AND 240V UNITS.

8.) "MORE DRIVE" ADDS 12.7dB OF GAIN TO THE "DRIVE MODE".

9.) INSTANCES NOT USED:
C32 C34 C37 CP17 CP21
CR10 R71-73 R83

DATABASE FILE: Z325S.DBF
CHECKED BY: JLA
DATE: 08-MAY-96
APPROVED: MDW
DATE: 13-MAY-96
TOLERANCES: UNLESS OTHERWISE NOTED
X.X ±0.050"
X.XX ±0.010"
X.XXX ±0.005"
ANGLES ±0.500°

PROPRIETARY
THIS DRAWING DOCUMENT CONTAINS INFORMATION WHICH IS PROPRIETARY TO AND IS THE PROPERTY OF THE FENDER MUSICAL INSTRUMENTS CO. AND MAY NOT BE USED, REPRODUCED OR DISCLOSED IN ANY MANNER WITHOUT THE EXPRESSED WRITTEN CONSENT FROM:
FENDER MUSICAL INSTRUMENTS CO.
MUSICAL INSTRUMENTS
2621 RESEARCH DRIVE
CORONA, CA 91720 USA
IT IS TIME...

NEXT HIGHER ASSEMBLY:
050400 PCB ASSY HOT ROD DELUXE

Fender MUSICAL INSTRUMENTS
2621 Research Drive
Corona, CA 91720 USA

TITLE: SCHEMATIC DIAGRAM
HOT ROD DELUXE

SIZE D | DRAWN: M.WILKENS | DRAWING NUMBER 050397 | REV. B
ENGR: M.WILKENS
SCALE: NONE | CREATED: 11-AUG-95 | PLOTTED: 12-JUN-96 | SHEET 1 OF 1

PART NO. 0050398000 SHEET 1 OF 1

REVISIONS				
ZONE	REV.	DESCRIPTION	DATE	APPROVED
	A	RELEASED PR325	13-MAY-96	MDW

NOTES:
1.) WIRES NOT SHOWN FOR CLARITY.

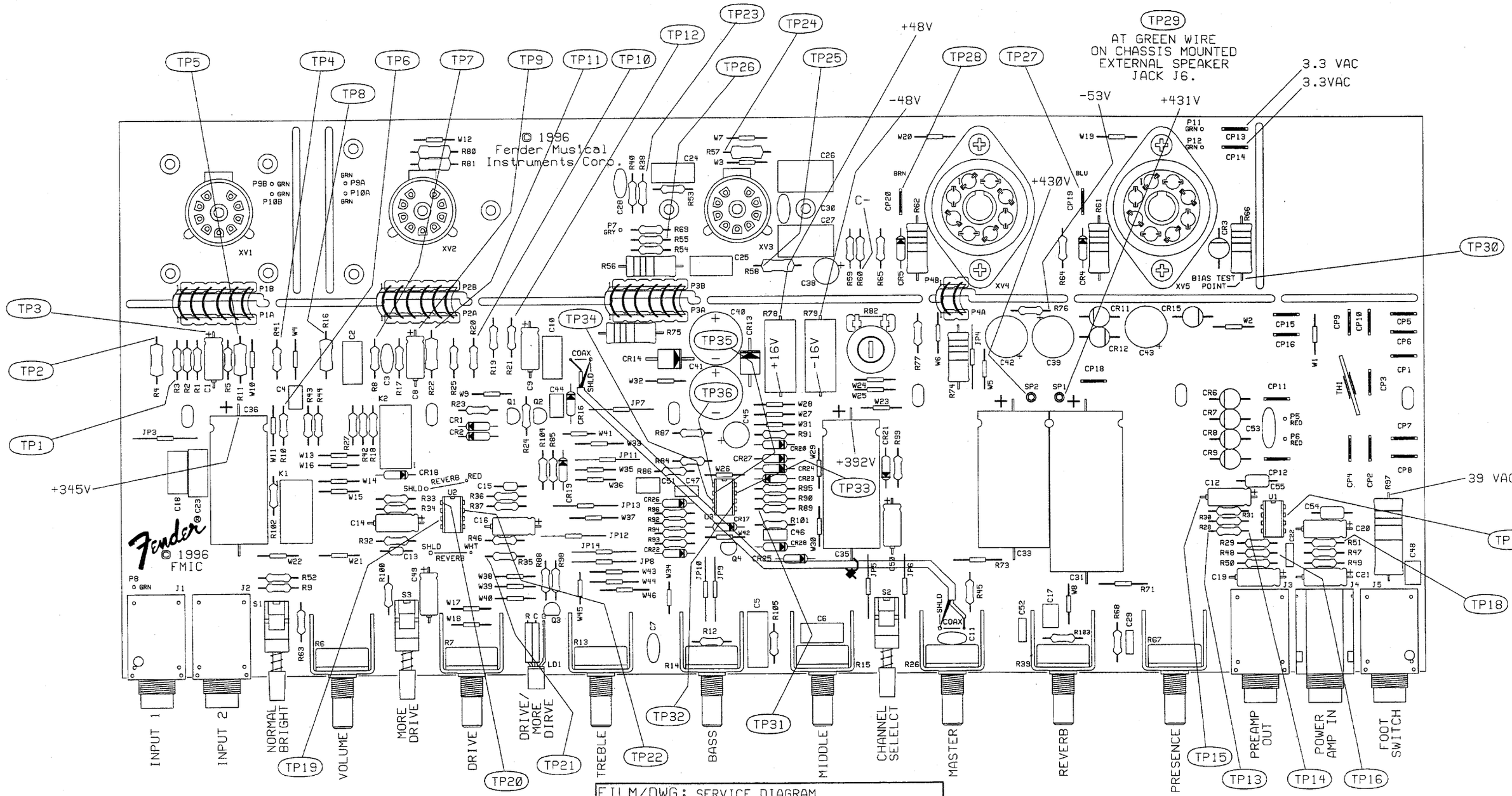

FILM/DWG: SERVICE DIAGRAM	
DATABASE: Z325PA.DBF	DATE: 12-JUN-96
LAYERS PLOTTED: 1 2 3 4 18	10

SCHEMATIC FOR FOOTSWITCH ASSEMBLY 050419.

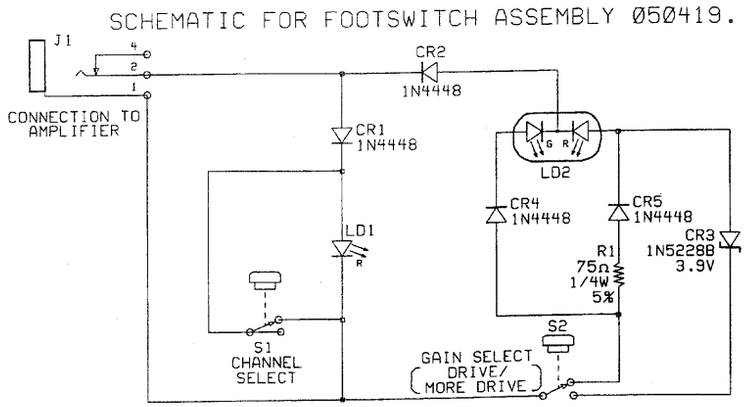

DATABASE FILE: Z325PA.DBF	
CHECKED BY: JLA	
DATE: 08-MAY-96	
APPROVED: MDW	
DATE: 13-MAY-96	
TOLERANCES: UNLESS OTHERWISE NOTED	
X.X	±0.050"
X.XX	±0.010"
X.XXX	±0.005"
ANGLES	±0.500°

PROPRIETARY

THIS DRAWING DOCUMENT CONTAINS INFORMATION WHICH IS PROPRIETARY TO AND IS THE PROPERTY OF THE FENDER MUSICAL INSTRUMENTS CO. AND MAY NOT BE USED, REPRODUCED OR DISCLOSED IN ANY MANNER WITHOUT THE EXPRESSED WRITTEN CONSENT FROM:
FENDER MUSICAL INSTRUMENTS CO.
REGIONAL HEADQUARTERS
2621 RESEARCH DRIVE
CORONA, CA 91720 USA
IT IS TIME...

NEXT HIGHER ASSEMBLY:

Fender® MUSICAL INSTRUMENTS
2621 Research Drive
Corona, CA 91720 USA

TITLE: SERVICE DIAGRAM
HOT ROD DELUXE.

SIZE	DRAWN: M.WILKENS	DRAWING NUMBER	REV.
C	ENGR: M.WILKENS	050399	A

SCALE: NONE | CREATED: 07-MAY-96 | PLOTTED: 12-JUN-96 | SHEET 1 OF 1

REVISIONS				
ZONE	REV.	DESCRIPTION	DATE	APPROVED
	A	RELEASED PR325	13-MAY-96	MDW
	B	EC 1701	24-MAY-96	MDW
	C	EC 1823	26-DEC-96	MDW

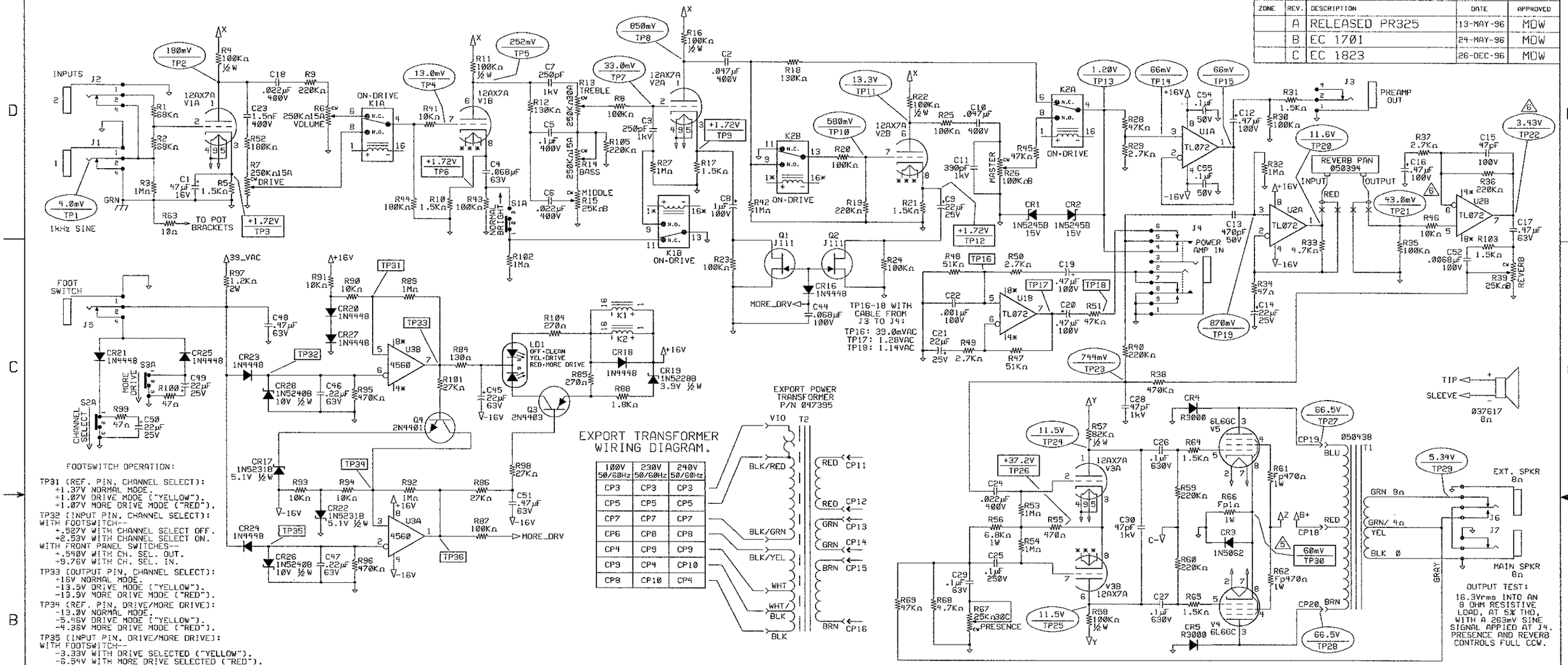

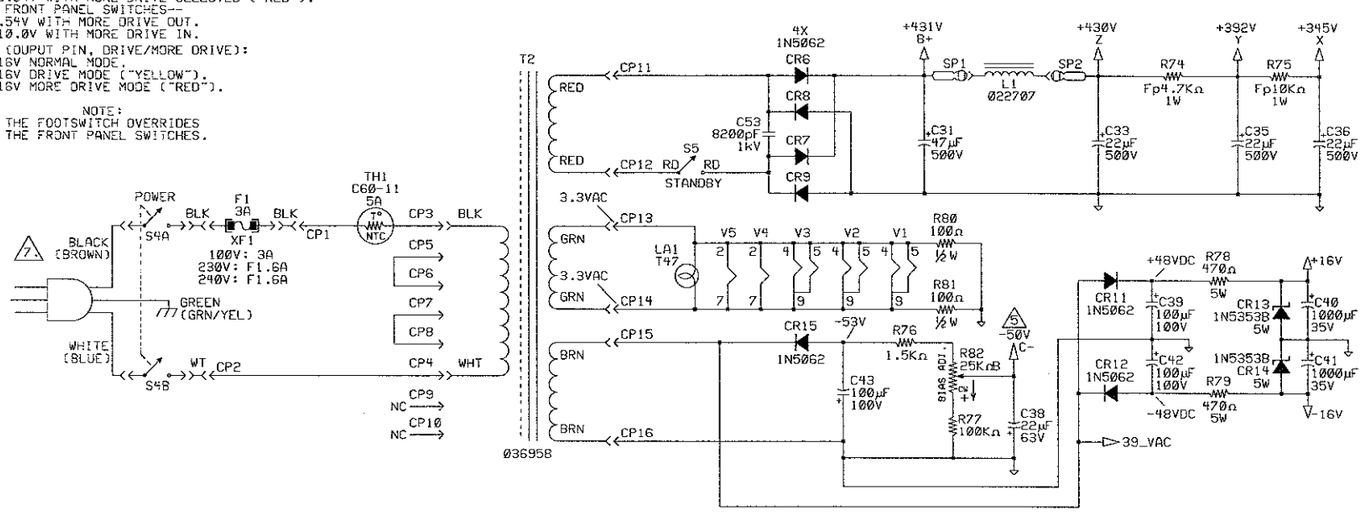

NOTES: (UNLESS SPECIFIED OTHERWISE)

1.) LAST INSTANCES: C55 CP20 CR28 F1 J7 K2 L1 LA1 LD1 Q4 R105 S5 T2 TH1 U3 V5

2.) SIX DIGIT NUMBERS ARE FENDER PART NUMBERS.

3.) ALL RESISTORS 1/4W 5% CARBON FILM.

4.) ALL VOLTAGES MEASURED WITH RESPECT TO GROUND USING A TRUE RMS DVM OF 1MΩ AC INPUT IMPEDANCE AND OF 10MΩ DC INPUT IMPEDANCE. VOLTAGES MAY VARY ±20%. TEST CONDITIONS:
LINE VOLTAGE 120VAC 60Hz.
ALL DC AND SUPPLY MEASUREMENTS MADE WITH NO INPUT SIGNAL.
REVERB CONTROL AT FULL CCW.
ALL OTHER CONTROLS AT 50% ROTATION.
NORMAL BRIGHT SWITCH OUT.
DRIVE ("YELLOW") MODE SELECTED.
BIAS SET TO 30mA PER OUTPUT TUBE. SEE NOTE 5.

5 BIAS ADJUSTMENT - NO SIGNAL APPLIED, RATED LINE VOLTAGE AT T2 POWER TRANSFORMER PRIMARY:
SET BIAS ADJUST POT R82 TO OBTAIN A READING OF +60mV AT TP30. VOLTAGE SHOWN AT BIAS POT WIPER IS FOR REFERENCE ONLY.

6 READINGS OBSERVED AT TP21 AND TP22 WILL VARY GREATLY DEPENDING ON INDIVIDUAL REVERB PAN RESPONSE. THE VOLTAGE GAIN AT U2B SHOULD BE 82.

7 COLORS IN PARENTHESES ARE FOR 230V AND 240V UNITS.

8.) "MORE DRIVE" ADDS 12.7dB OF GAIN TO THE "DRIVE MODE".

9.) INSTANCES NOT USED:
C32 C34 C37 CP17 CP21
CR10 R71-73 R83

DATABASE FILE:	Z325S.DBF
CHECKED BY:	JLA
DATE:	08-MAY-96
APPROVED:	MDW
DATE:	13-MAY-96
TOLERANCES: UNLESS OTHERWISE NOTED	
X.X	±0.050"
X.XX	±0.010"
X.XXX	±0.005"
ANGLES	±0.500°

PROPRIETARY
THIS DRAWING DOCUMENT CONTAINS INFORMATION WHICH IS PROPRIETARY TO AND IS THE PROPERTY OF THE FENDER MUSICAL INSTRUMENTS CO. AND MAY NOT BE USED, REPRODUCED OR DISCLOSED IN ANY MANNER WITHOUT THE EXPRESSED WRITTEN CONSENT FROM:
FENDER MUSICAL INSTRUMENTS CO.
REGIONAL HEADQUARTERS
2621 RESEARCH DRIVE
CORONA, CA 91720 USA
IT IS TIME...

NEXT HIGHER ASSEMBLY:
050400 PCB ASSY
HOT ROD DELUXE

Fender MUSICAL INSTRUMENTS
2621 Research Drive
Corona, CA 91720 USA

TITLE: SCHEMATIC DIAGRAM
HOT ROD DELUXE

SIZE	DRAWN: M.WILKENS	DRAWING NUMBER	REV.
D	ENGR: M.WILKENS	050397	C
SCALE: NONE	CREATED: 11-AUG-95 / PLOTTED: 26-DEC-96	SHEET 1 OF 1	

REVISIONS			
REV.	DESCRIPTION	DATE	APPROVED
A	EC 2637	21-JUN-01	S.M.B.

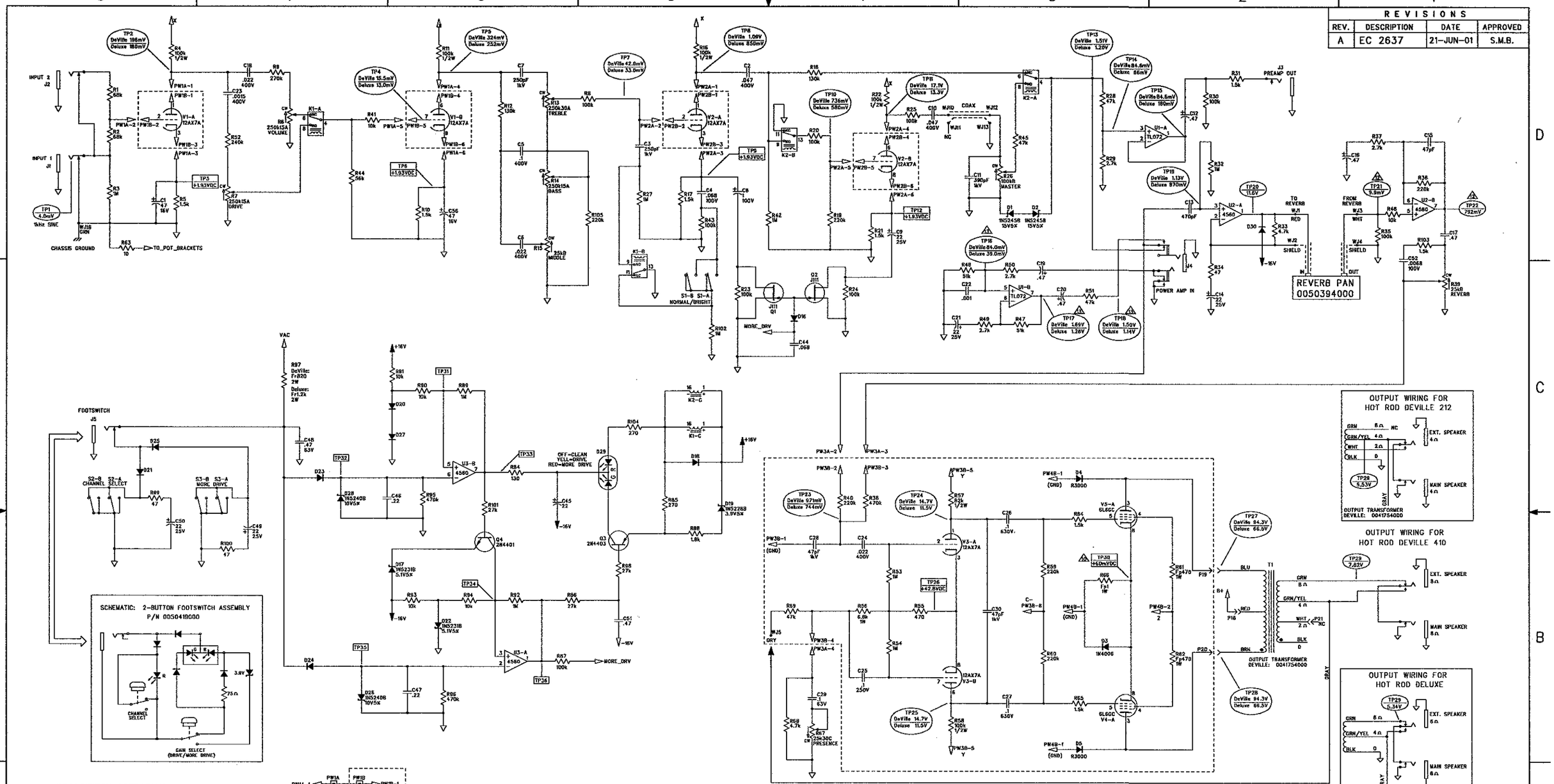

FOOTSWITCH OPERATION:

TP31 (REF. PIN, CHANNEL SELECT):
+1.39V NORMAL MODE.
+1.08V DRIVE MODE ("YELLOW").
+1.08V MORE DRIVE MODE ("RED").
TP32 (INPUT PIN, CHANNEL SELECT):
WITH FOOTSWITCH---
+.533V WITH CHANNEL SELECT OFF.
+2.54V WITH CHANNEL SELECT ON.
WITH FRONT PANEL SWITCHES---
+.536V WITH CHANNEL SELECT OUT.
+0.69V WITH CHANNEL SELECT IN.
TP33 (OUTPUT PIN, CHANNEL SELECT:
+15.0V NORMAL MODE.
-13.0V DRIVE MODE ("YELLOW").
-13.5V MORE DRIVE MODE ("RED").
TP34 (REF. PIN, DRIVE/MORE DRIVE):
-12.5V NORMAL MODE.
-4.90V DRIVE MODE ("YELLOW").
-4.14V MORE DRIVE MODE ("RED").
TP35 (INPUT PIN, DRIVE/MORE DRIVE):
WITH FOOTSWITCH---
-3.34V WITH DRIVE SELECTED ("YELLOW").
-6.52V WITH MORE DRIVE SELECTED ("RED").
WITH FRONT PANEL SWITCHES---
-.52V WITH MORE DRIVE OUT.
-6.92V WITH MORE DRIVE IN.
TP36 (OUTPUT PIN, DRIVE/MORE DRIVE).
-15.5V NORMAL MODE.
-15.4V DRIVE MODE ("YELLOW").
+16.0V MORE DRIVE MODE ("RED").

NOTE:
THE FOOTSWITCH OVERRIDES THE FRONT PANEL SWITCHES.

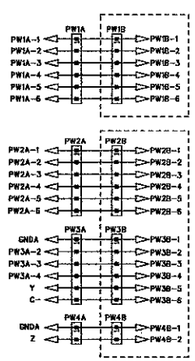

⚠ BIAS ADJUSTMENT — NO SIGNAL APPLIED, RATED LINE VOLTAGE AT T2 POWER TRANSFORMER PRIMARY. SET BIAS ADJUST POT R82 TO OBTAIN A READING OF +60mV AT TP30. VOLTAGE SHOWN AT BIAS POT WIPER IS FOR REFERENCE ONLY.

9. THE FOLLOWING ITEMS DIFFER IN VALUE BETWEEN THE DEVILLE AND DELUXE PCB ASSEMBLIES: C33, R78, R79, R97. ALSO, R71 AND R73 ARE STUFFED WITH WIRE JUMPERS IN THE DELUXE PCB ASSY.
8. THE FOLLOWING ITEMS ARE NOT STUFFED IN DEVILLE PCB ASSY 0057250000: W1, W2
7. THE FOLLOWING ITEMS ARE NOT STUFFED IN DELUXE PCB ASSY 0057249000: C32, C34, C37, D10, P17, P21, R70, R72, R83, W3, W4
6. THIS SCHEMATIC IS FOR THE FOLLOWING PCB ASSEMBLIES: 0057248000 PCB ASSY HOT ROD DELUXE 0057250000 PCB ASSY HOT ROD DEVILLE
5. THIS SCHEMATIC IS FOR PCB FABRICATION 0057228000
4. ALL DIODES ARE 1N4148.
3. ALL POLARIZED CAPACITORS IN uF, 20%; 50V MINIMUM.
2. ALL UNPOLARIZED CAPACITORS IN uF, 10% OR BETTER; 50V MINIMUM. (POWER SUPPLY BYPASS CAPACITORS ARE 20%).
1. ALL RESISTORS IN OHMS, 5%; 1/4W.

NOTES: (UNLESS OTHERWISE NOTED)

16. LAST REFERENCE DESIGNATORS USED: C66, D30, F1, J5, K2, P21, PW4, D4, R105, RT1, S5, SP2, U3, V5, W26
15. CIRCUITS INSIDE DASHED BOXES ARE ON BREAKAWAYS.
14. "MORE DRIVE" ADDS 12.769 dB GAIN TO THE "DRIVE" MODE.
⚠ TP 16-18 WITH CABLE FROM J3 TO J4
⚠ READINGS OBSERVED AT TP21 AND TP22 WILL VARY GREATLY DEPENDING ON INDIVIDUAL REVERB PAN RESPONSE. THE VOLTAGE GAIN AT U28 SHOULD BE 82.
11. ALL VOLTAGES MEASURED WITH RESPECT TO GROUND USING A TRUE RMS DVM OF 1MΩ AC INPUT IMPEDANCE AND OF 10MΩ DC INPUT IMPEDANCE. VOLTAGES MAY VARY +/-20%. TEST CONDITIONS:
UNIT OPERATING AT RATED LINE VOLTAGE
ALL DC AND SUPPLY MEASUREMENTS MADE WITH NO INPUT SIGNAL.
REVERB CONTROL AT FULL CCW.
ALL OTHER CONTROLS AT 50% ROTATION.
NORMAL BRIGHT SWITCH OUT.
DRIVE ("YELLOW") MODE SELECTED.
BIAS SET TO 30mV PER OUTPUT TUBE. SEE NOTE 10.

SPEAKER WIRING

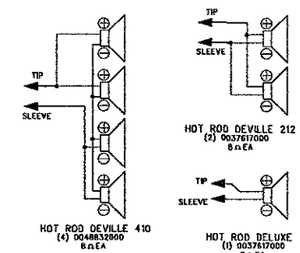

OUTPUT TEST:

21.1V RMS INTO AN 8 ΩRESISTIVE LOAD, OR 14.9V RMS INTO A 4 Ω RESISTIVE LOAD, AT 5% THD, WITH A 286mV 1kHz SIGNAL APPLIED AT J4. PRESENCE AND REVERB CONTROLS FULL CCW.

THIS DOCUMENT CONTAINS INFORMATION OF A PROPRIETARY NATURE TO FENDER MUSICAL INSTRUMENTS AND IS SUBMITTED TO YOU IN CONFIDENCE AND SHALL NOT BE DISCLOSED OR TRANSMITTED TO OTHERS WITHOUT AUTHORIZATION FROM FENDER MUSICAL INSTRUMENTS.

CHECKED BY: B. West
DATE: 26-JUL-01
APPROVED BY: S. Bankhead
DATE: 26-JUL-01
DRAWN: Don Fox ENGR: S.Bankhead
DATABASE FILE: Z485S.SCH

Fender® MUSICAL INSTRUMENTS
Corona, CA U.S.A.

TITLE: SERVICE DIAGRAM, COMBINED (schematic)
HOT ROD DELUXE/DEVILLE

SIZE	DRAWING NUMBER	REV.
D	0057251000	A
RELEASE DATE: 21-JUN-01	SHEET: 1 OF 3	

REVISIONS			
REV.	DESCRIPTION	DATE	APPROVED
A	EC 2637	21-JUN-01	S.M.B

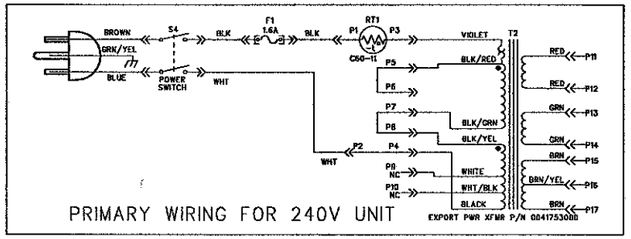

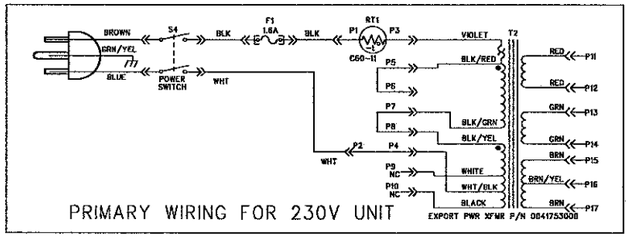

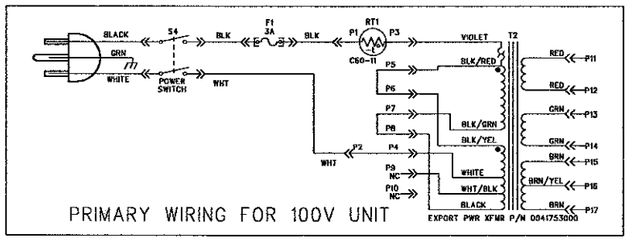

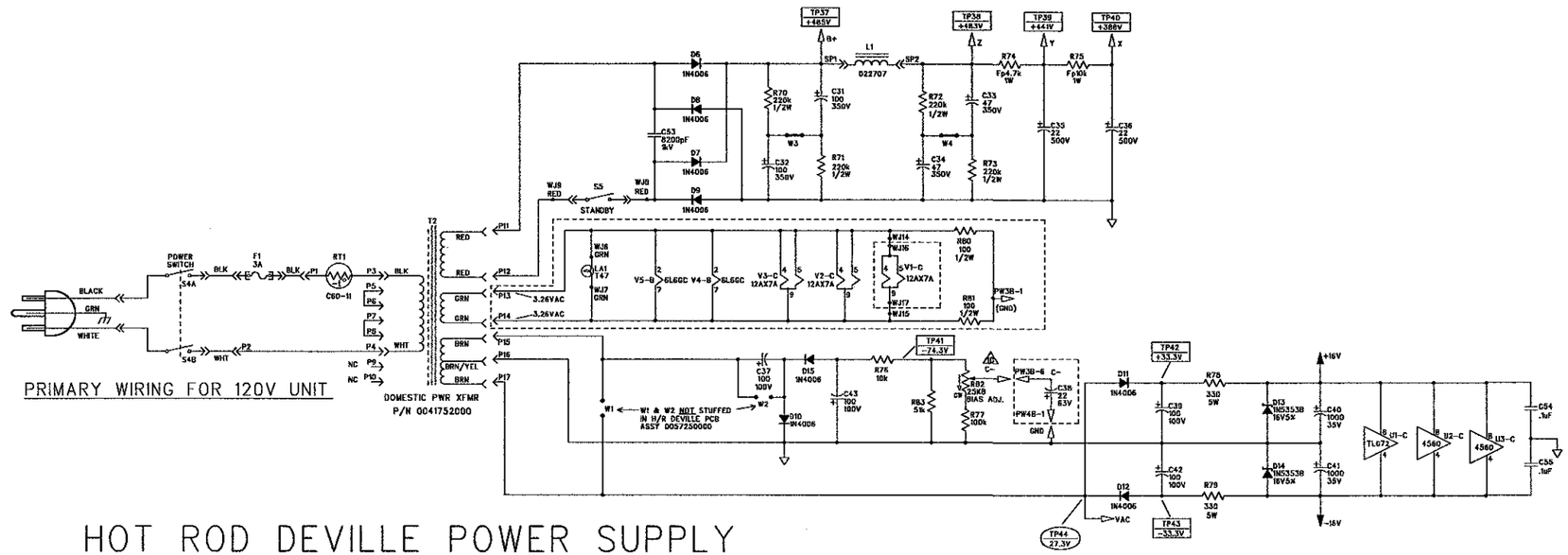

HOT ROD DEVILLE POWER SUPPLY

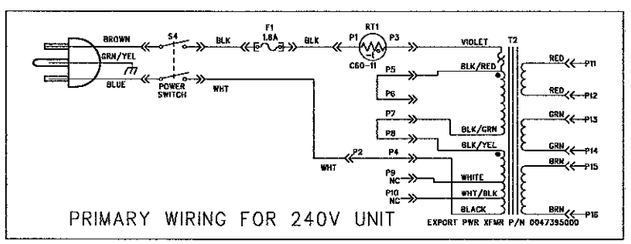

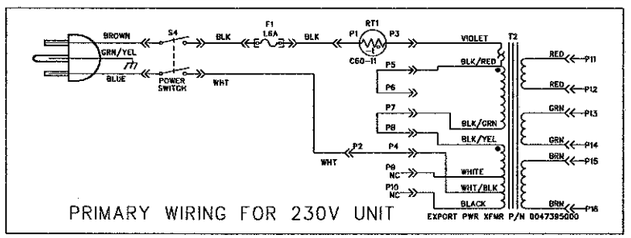

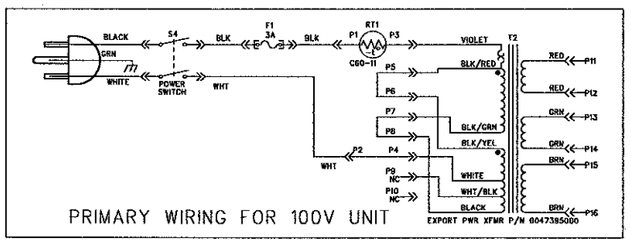

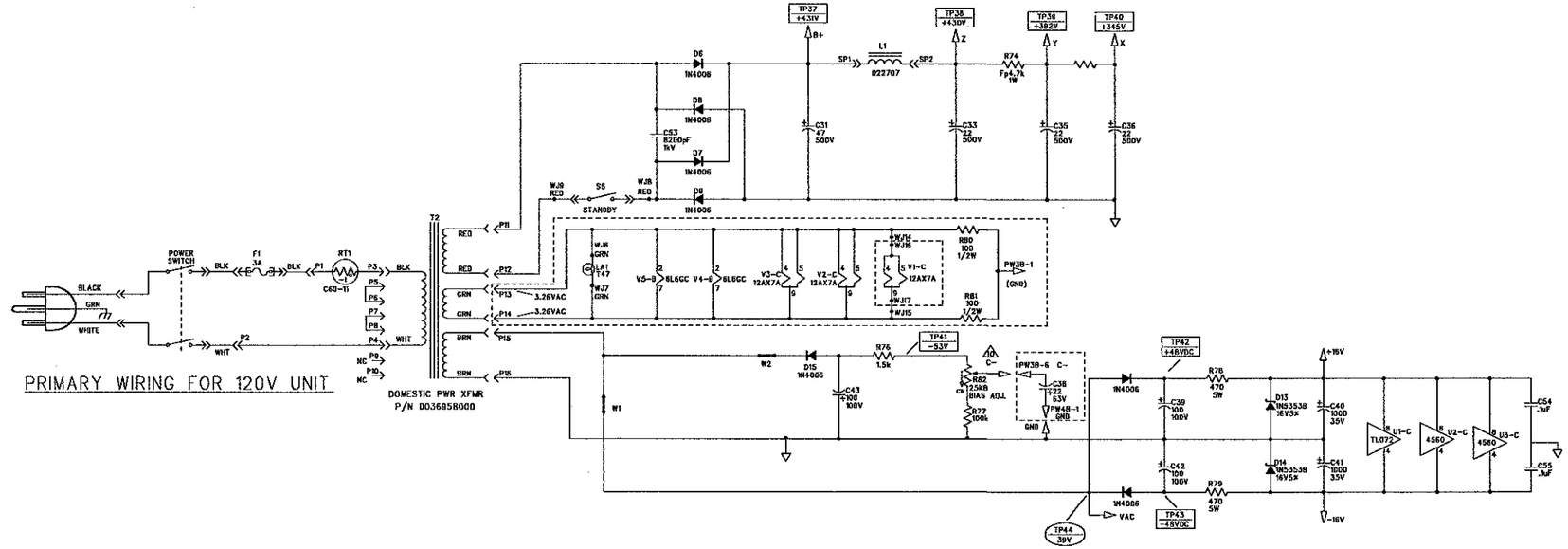

HOT ROD DELUXE POWER SUPPLY

NOTES: SEE SHEET 1

THIS DOCUMENT CONTAINS INFORMATION OF A PROPRIETARY NATURE TO FENDER MUSICAL INSTRUMENTS AND IS SUBMITTED TO YOU IN CONFIDENCE AND SHALL NOT BE DISCLOSED OR TRANSMITTED TO OTHERS WITHOUT AUTHORIZATION FROM FENDER MUSICAL INSTRUMENTS.

Fender MUSICAL INSTRUMENTS
Corona, CA U.S.A.

CHECKED BY: R. Dezi
DATE: 26-JUL-01
APPROVED BY: S. Bankhead
DATE: 26-JUL-01
DRAWN: S.Bankhead ENGR: S.Bankhead
DATABASE FILE: Z485S.SCH

TITLE: SERVICE DIAGRAM, COMBINED (schematic)
HOT ROD DELUXE/DEVILLE

SIZE	DRAWING NUMBER	REV.
D	0057251000	A

RELEASE DATE: 21-JUN-01 SHEET: 2 OF 3

REVISIONS			
REV.	DESCRIPTION	DATE	APPROVED
A	EC 2637	21-JUN-01	S.M.B.

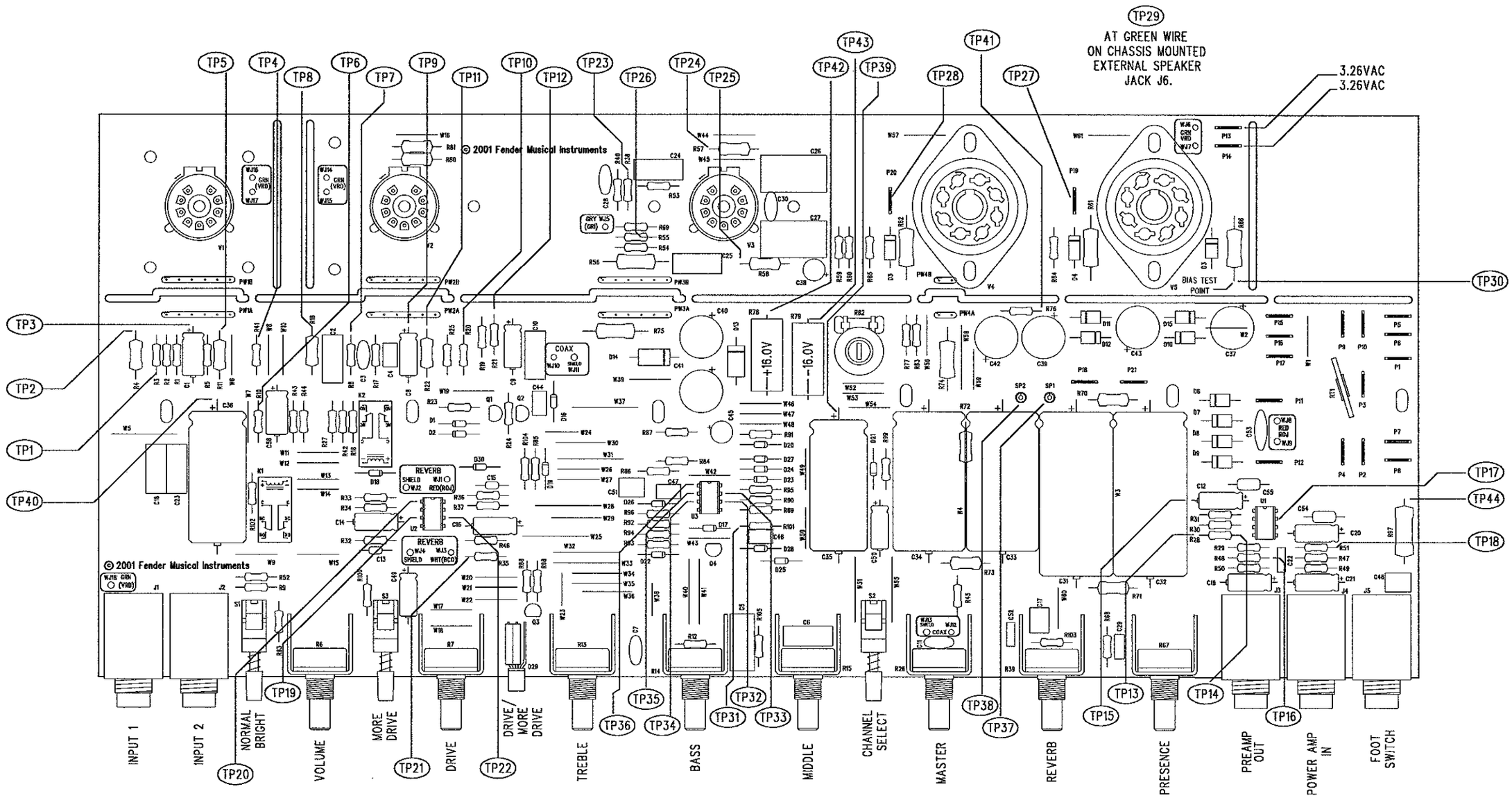

FILM/DWG:	SERVICE DIAGRAM	
DATABASE:	Z485P.PCB	DATE: 21-JUN-01

3. SEE PAGE 1 FOR NOTES AND TEST CONDITIONS
2. WIRES NOT SHOWN FOR CLARITY
1. PCB SHOWN BEFORE POWER AMP BREAKAWAY IS INSTALLED IN CHASSIS

THIS DOCUMENT CONTAINS INFORMATION OF A PROPRIETARY NATURE TO FENDER MUSICAL INSTRUMENTS AND IS SUBMITTED TO YOU IN CONFIDENCE AND SHALL NOT BE DISCLOSED OR TRANSMITTED TO OTHERS WITHOUT AUTHORIZATION FROM FENDER MUSICAL INSTRUMENTS.

Fender® MUSICAL INSTRUMENTS
Corona, CA U.S.A.

CHECKED BY: B Resi
DATE: 26-JUL-01
APPROVED BY: S. Bankhead
DATE: 26-Jul-01
DRAWN: Don Fox
ENGR: S. Bankhead

TITLE: SERVICE DIAGRAM, COMBINED (PCB assy)
HOT ROD DELUXE/DEVILLE

SIZE	DRAWING NUMBER	REV.
C	0057251000	A