MARSHALL 1974 18 WATT

Drawn By Steve Luckey
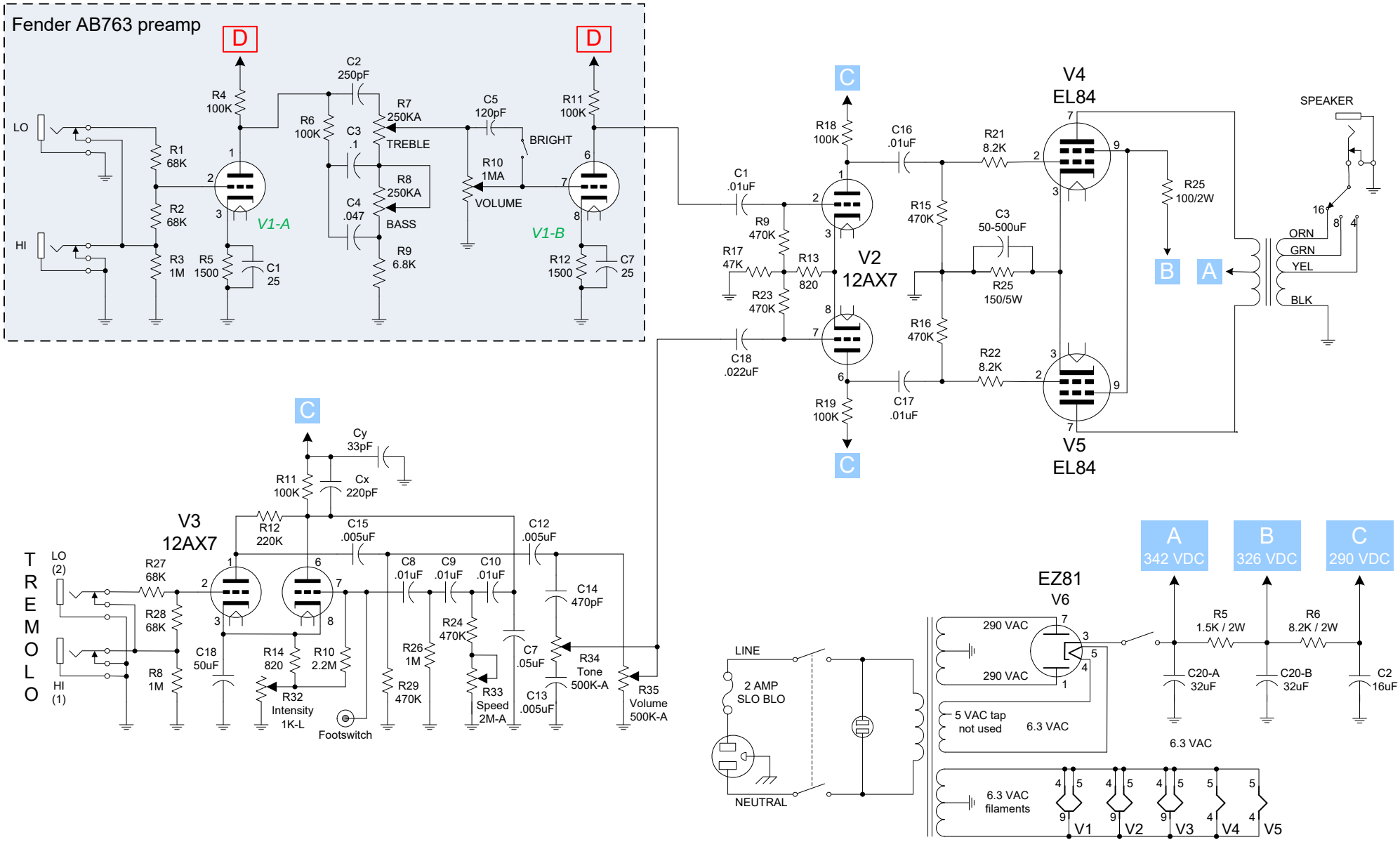
October 13, 2006