Fender Bandmaster
AB763
Vibrato Circuit
Original

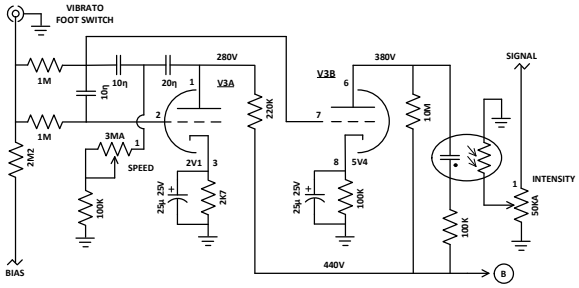

Fender Bandmaster
AB763
Vibrato Circuit
Modification

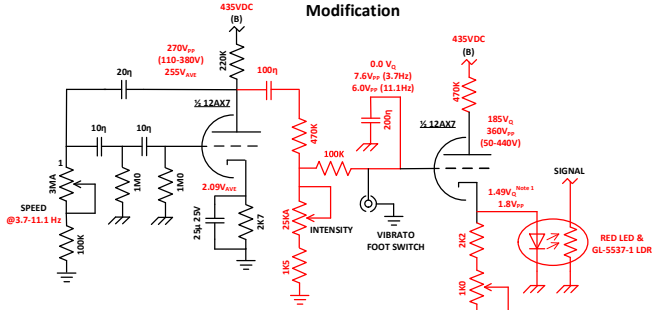

NOTES:

1. Adjust the bias voltage (V_Q) for a new circuit or if the LED, LDR, or 12AX7 are changed in an existing circuit, until the LDR reads 3M-4M resistance (out of circuit) with the vibrato off and record voltage for future adjustment. Return bias voltage (V_Q) to noted value during servicing if needed.