K-3 SHEET A

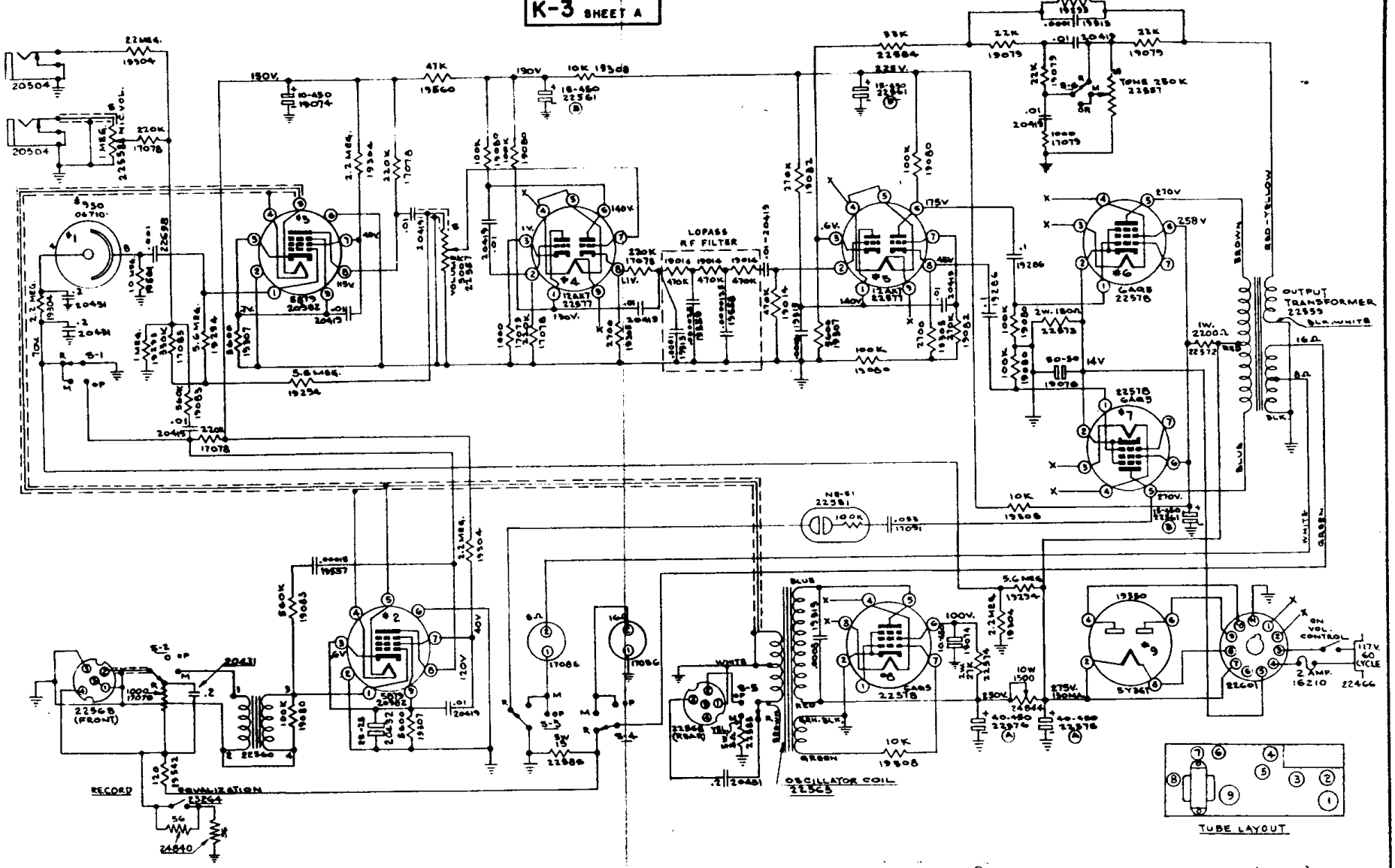

NOTE: VOLTAGES POINT TO POINT ARE BASED ON 117 VOLT A.C. LINE INPUT.

Ⓐ-INDICATES CAPACITORS IN SAME CAN (22576)
Ⓑ-INDICATES CAPACITORS IN SAME CAN (22561)
S-INDICATES TERMINAL AT CLOCKWISE STOP.
VOLTAGES INDICATED MEASURED TO CHASSIS GROUND (FUNCTION SWITCH IN MAG. OR OPT. PLAY BACK POSITION)
ALL RESISTORS 1/2 WATT UNLESS INDICATED OTHERWISE
S-1 TO S-6 (INCL.) INDICATE SECTIONS OF SELECTOR SWITCH (22558)

WIRE COLOR CODE			
WHITE	GROUND	BROWN	SCREEN
YELLOW	CATHODE	BLACK	AC
RED	B+	WHITE & BLACK	B-
GREEN	GRID		
BLUE	PLATE		

Bell & Howell Co. Chicago U.S.A.

AMPLIFIER WIRING DIAGRAM FOR DESIGNS 202 (ALL)

DATE 3-3-52 REVISED- 4-25-52	SERVICE DATA	DRAWN APVD.