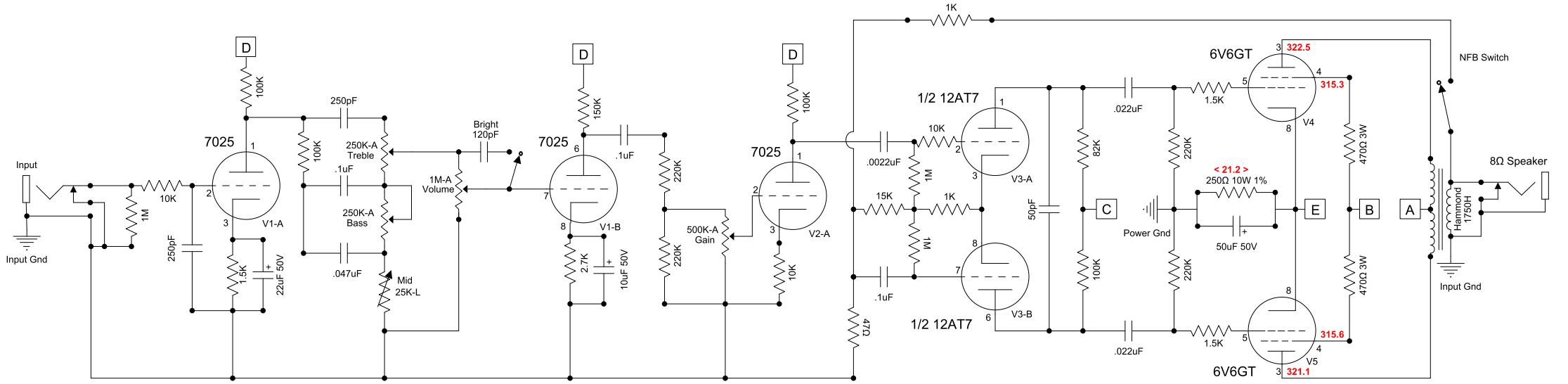

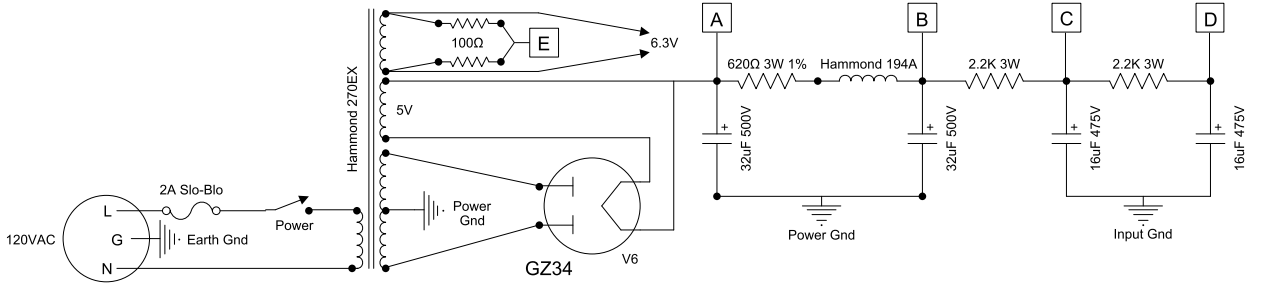

Musing 15

Based on the AA864 Bassman Bass Channel Preamp

Drawn by dwinstonwood
07/11/2022