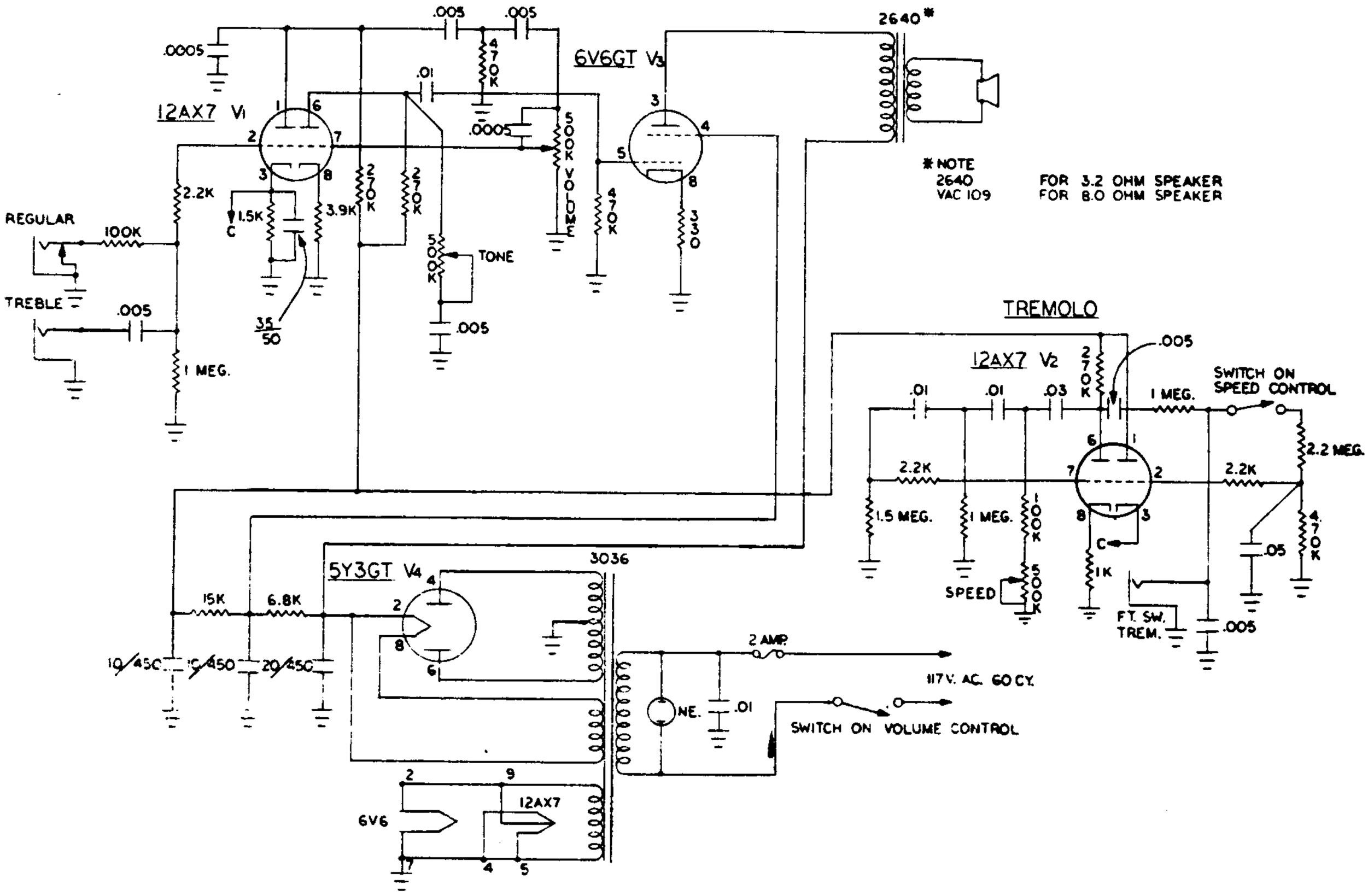

Gretsch Model G6151