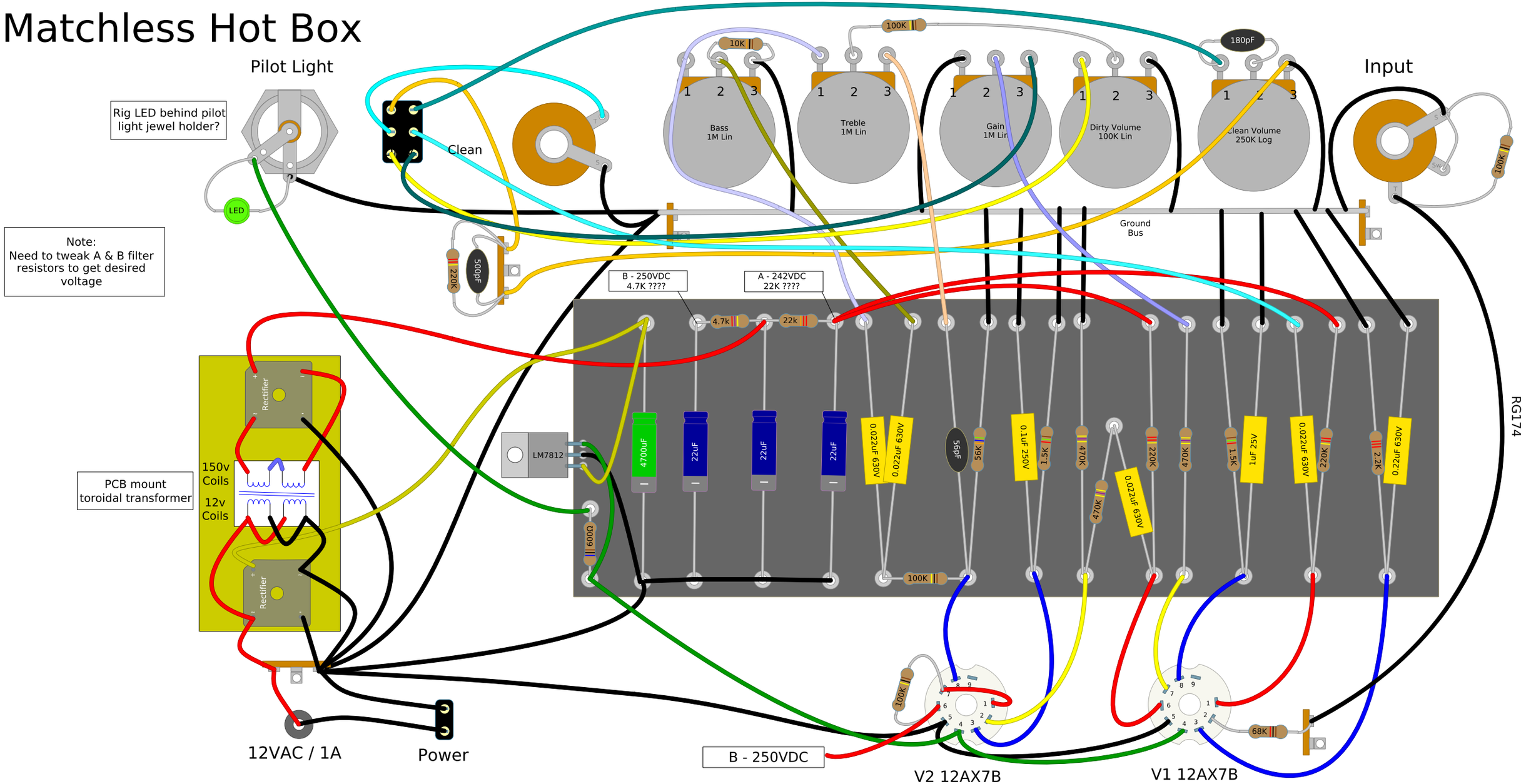Matchless Hot Box