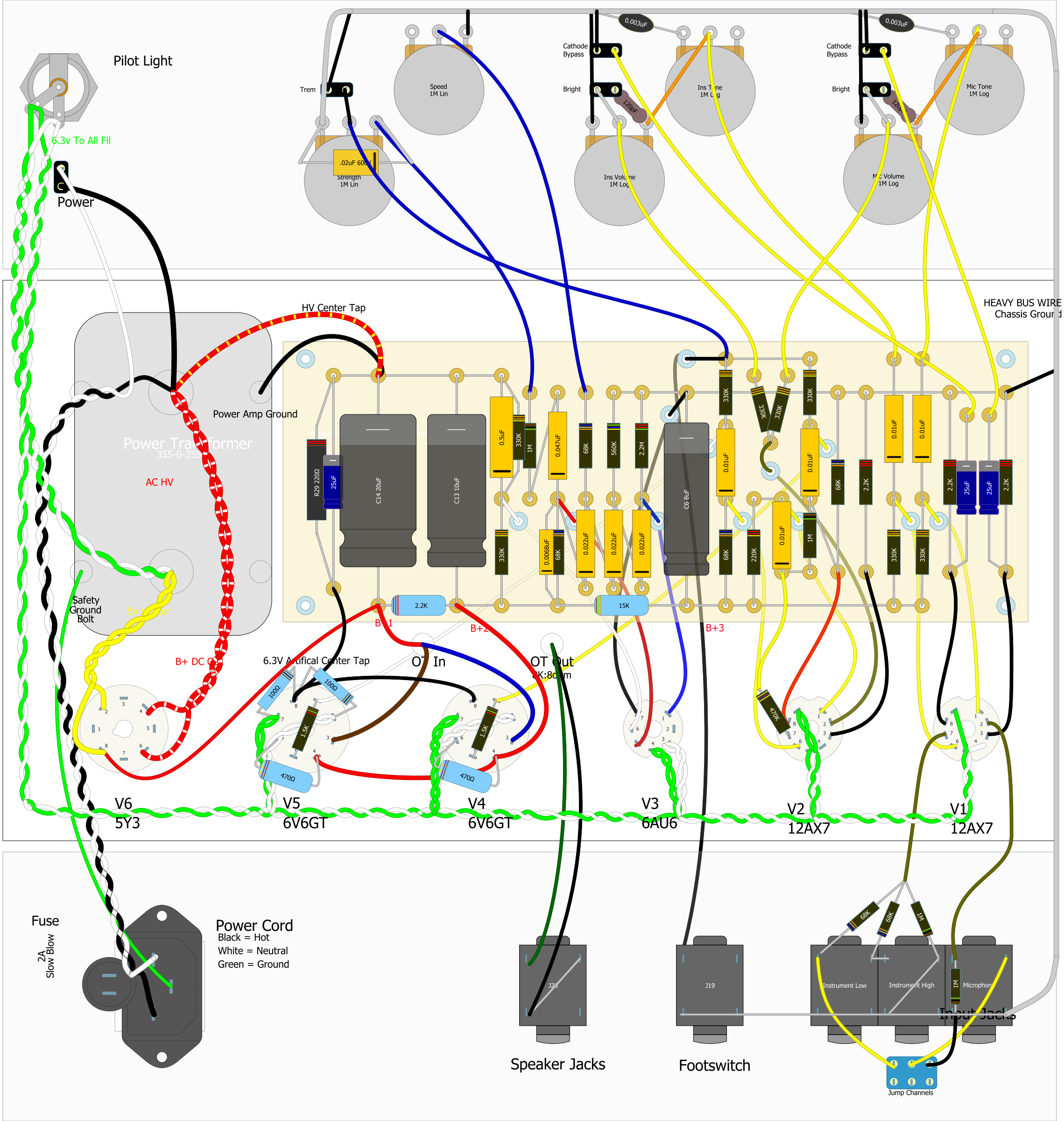
Pilot Light
6.3v To All Fil
Power
Trem
Speed
1M Lin
.02uF 600V
Strength
1M Lin
Cathode
Bypass
Bright
0.003uF
120pF
Ins Tone
1M Log
Ins Volume
1M Log
Mic Tone
1M Log
Mic Volume
1M Log
HEAVY BUS WIRE
Chassis Ground
HV Center Tap
Power Amp Ground
Power Transformer
355-0-355
AC HV
Safety
Ground
Bolt
5v Filter
B+ DC Out
6.3V Artifical Center Tap
OT In
OT Out
8K:8ohm
B+1
B+2
B+3
R29 220Ω
25uF
C14 20uF
C13 10uF
0.5uF
330K
1M
0.047uF
68K
560K
2.2M
C6 8uF
0.01uF
220K
0.0068uF
0.022uF
2.2K
15K
470K
100Ω
1.5K
470Ω
V6
5Y3
V5
6V6GT
V4
6V6GT
V3
6AU6
V2
12AX7
V1
12AX7
Fuse
2A
Slow Blow
Power Cord
Black = Hot
White = Neutral
Green = Ground
J20
Speaker Jacks
J19
Footswitch
Instrument Low
Instrument High
Microphone
Input Jacks
Jump Channels