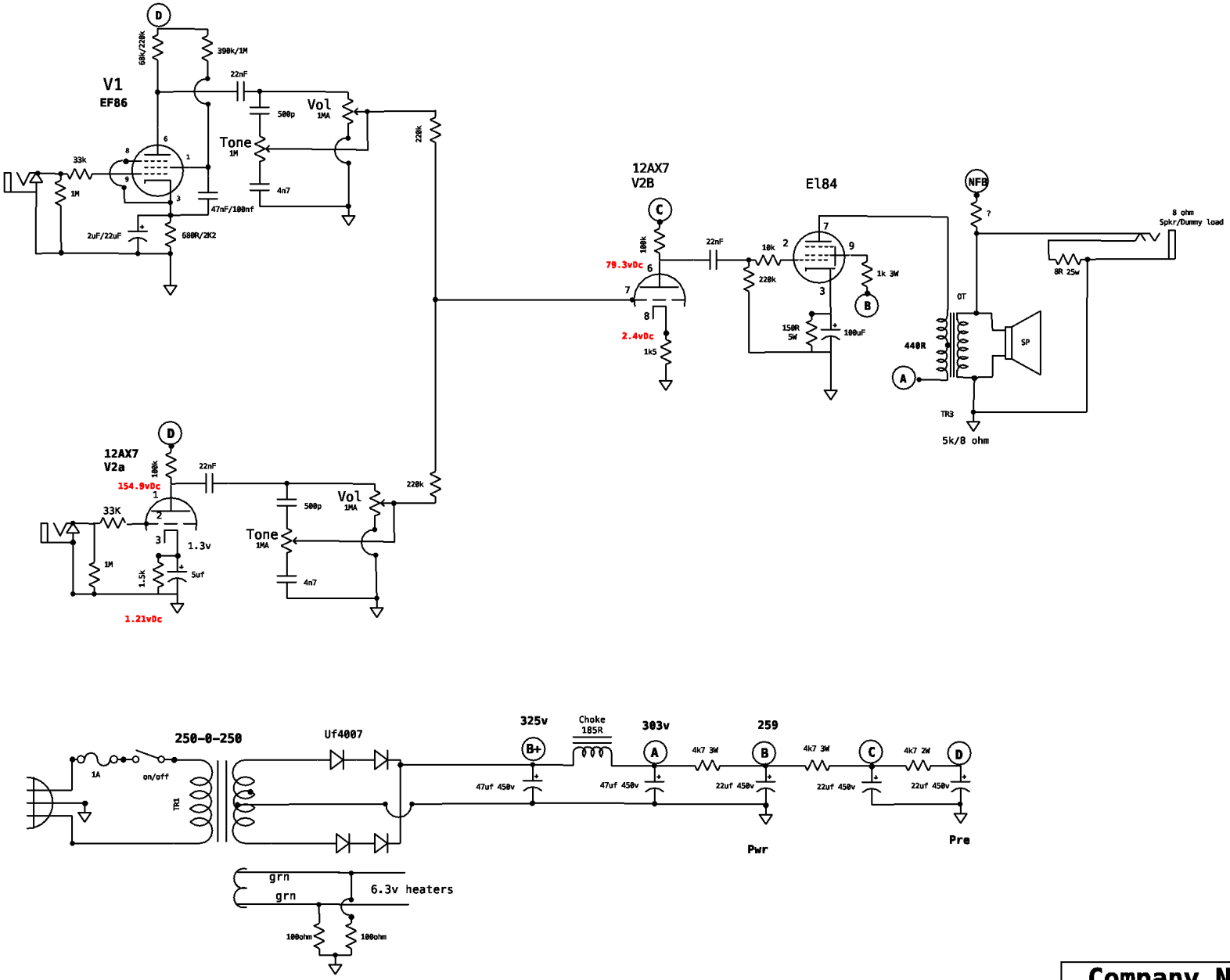

Company Name		
Schematic Name		
Chox	Rev 1.0 2023-09-20	Page #