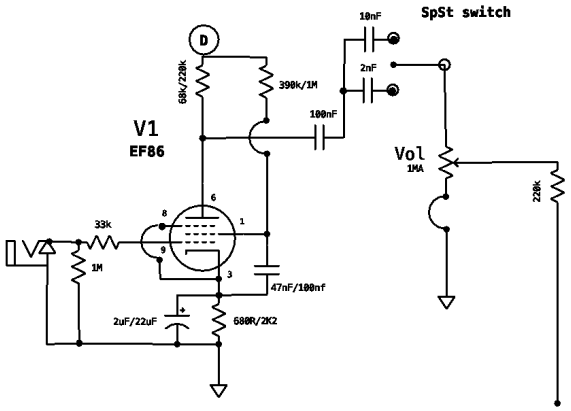

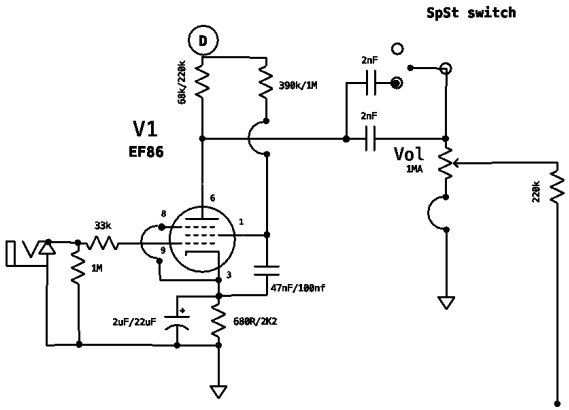

Company Name		
Schematic Name		
holcombe	Rev 1.0 2023-09-20	Page #