Revised 30 July 2009
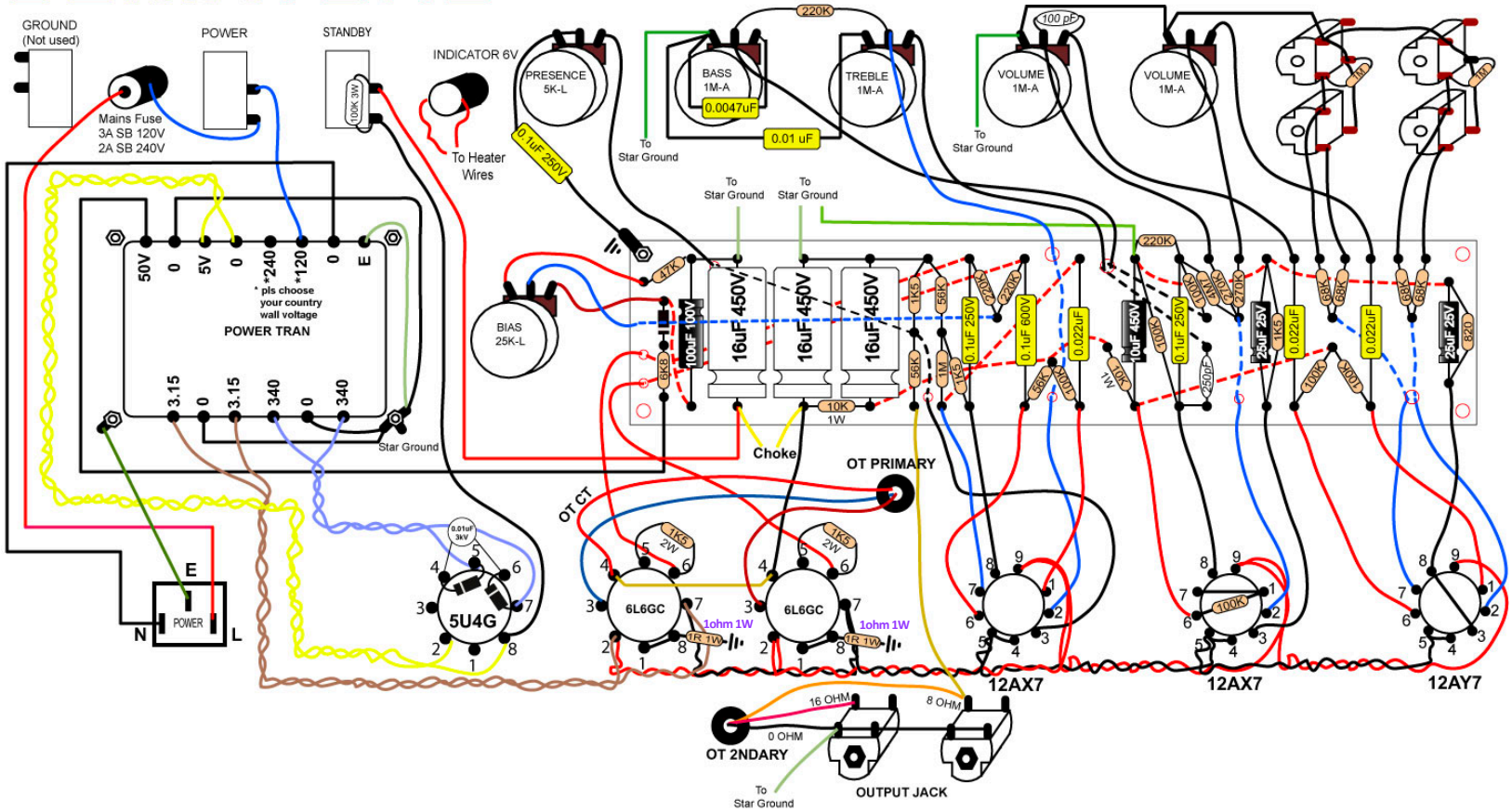
CERIATONE 5F4 SUPER AMP LAYOUT