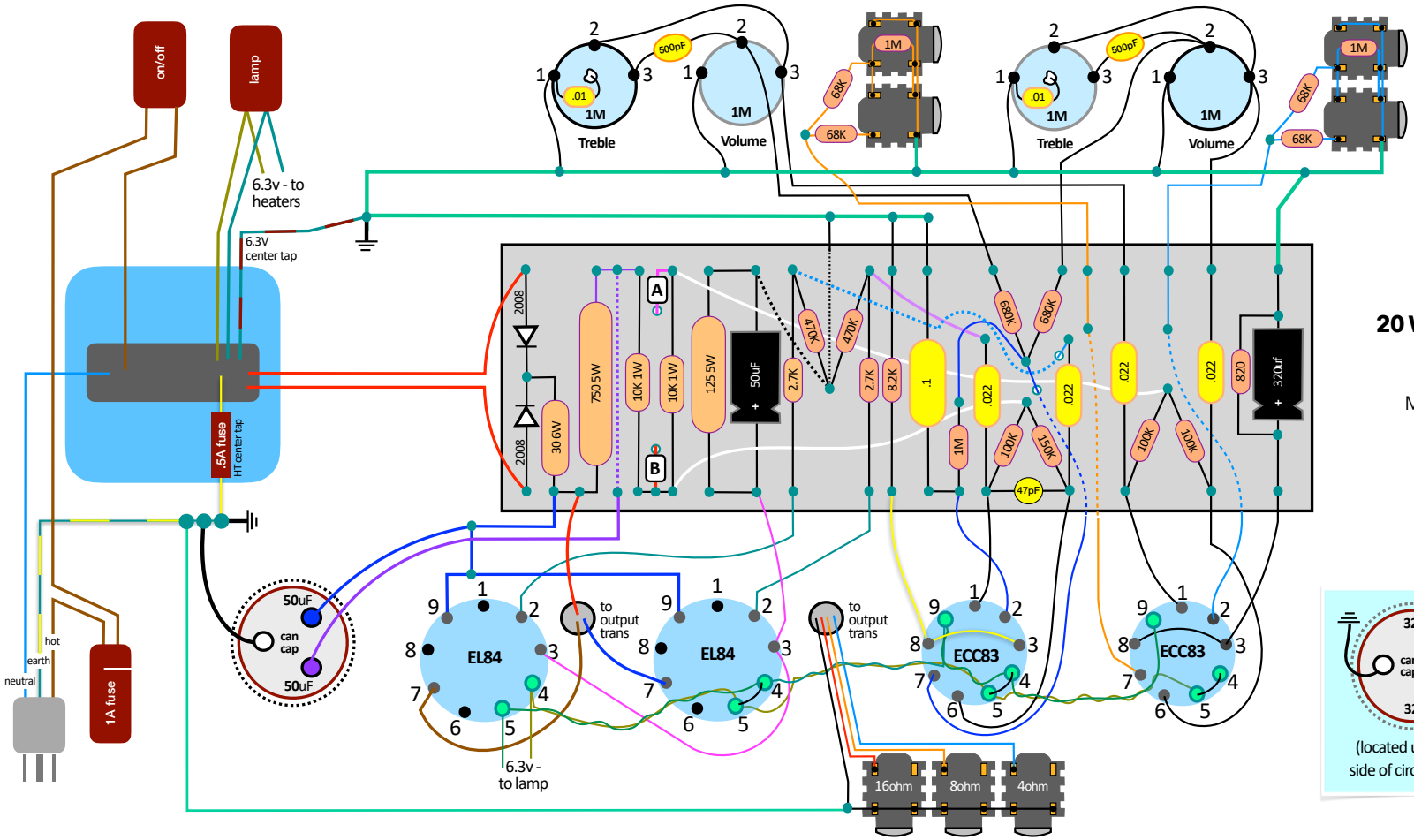

MARSHALL 1917
20 WATT P.A. AMPLIFIER

Faithful to the original Marshall 1917 schematic

Layout by Glenn Key

10-16-23

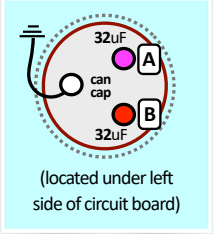

(located under left side of circuit board)