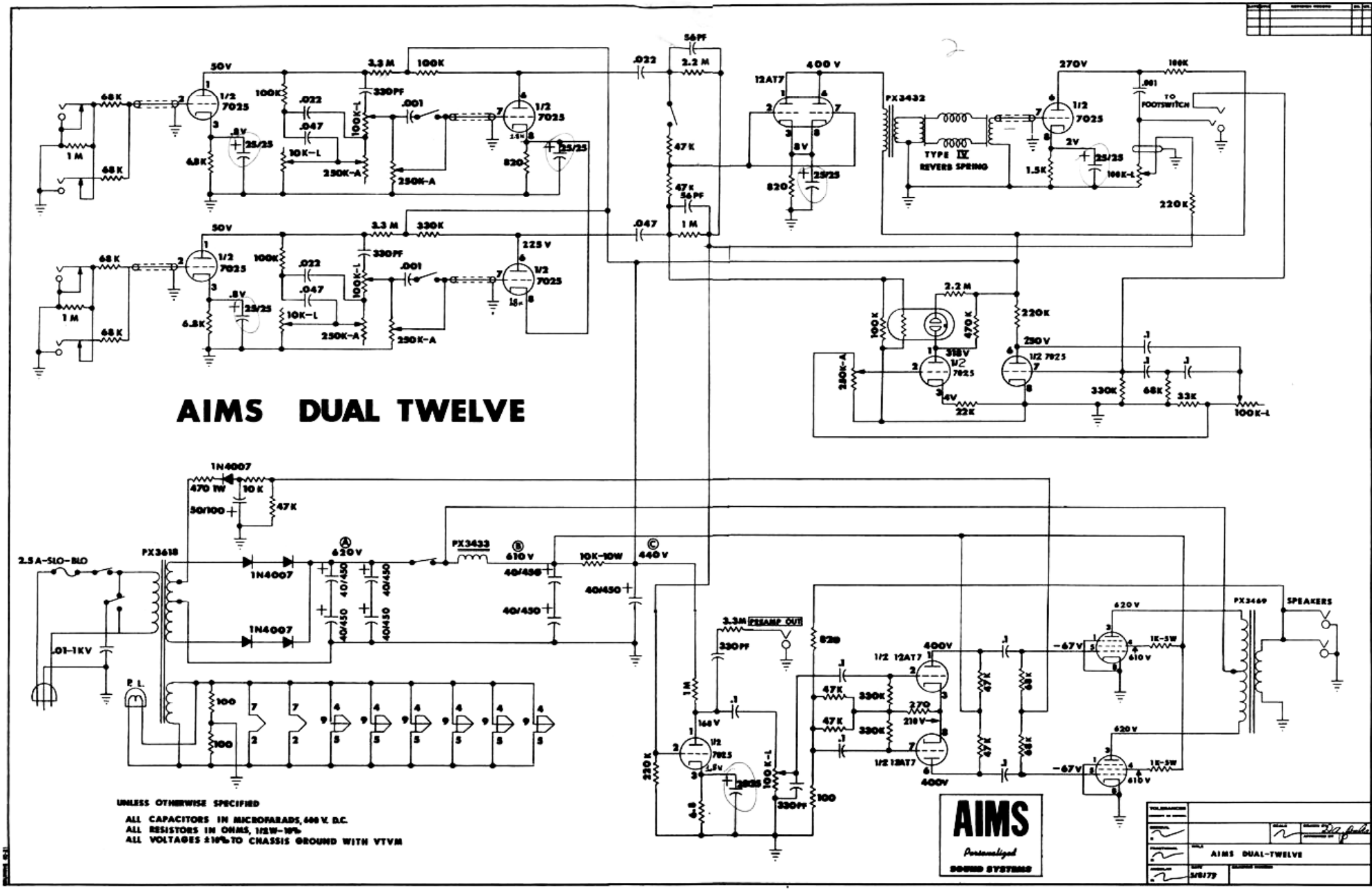
AIMS DUAL TWELVE
50V
3.3 M
100K
.022
56PF
2.2 M
400 V
12AT7
PX3432
270V
100K
.001
TO FOOTSWITCH
1/2 7025
68K
1 M
100K
.022
.047
330PF
.001
100K-L
10K-L
250K-A
250K-A
.8V
25/25
6.8K
820
47K
56PF
1 M
8V
2V
1.5K
100K-L
220K
TYPE IV REVERB SPRING
330K
225 V
.047
2.2M
470K
220K
250V
35V
4V
22K
330K
68K
33K
100K-L
250K-A
1N4007
470 1W
10 K
47K
30/100
2.5A-SLO-BLO
PX3618
620V
PX3633
610V
10K-10W
440V
40/450
.01-1KV
P.L.
100
3.3M PREAMP OUT
330PF
820
1/2 12AT7
400V
-67V
1K-5W
610V
PX3469
SPEAKERS
1M
.1
168V
47K
330K
270
210V
68K
220K
100K-L
330PF
100
6.8
UNLESS OTHERWISE SPECIFIED
ALL CAPACITORS IN MICROFARADS, 600 V. D.C.
ALL RESISTORS IN OHMS, 1/2W-10%
ALL VOLTAGES ±10% TO CHASSIS GROUND WITH VTVM
AIMS
Personalized
SOUND SYSTEMS
AIMS DUAL-TWELVE
2/6/79

AIMS DUAL TWELVE

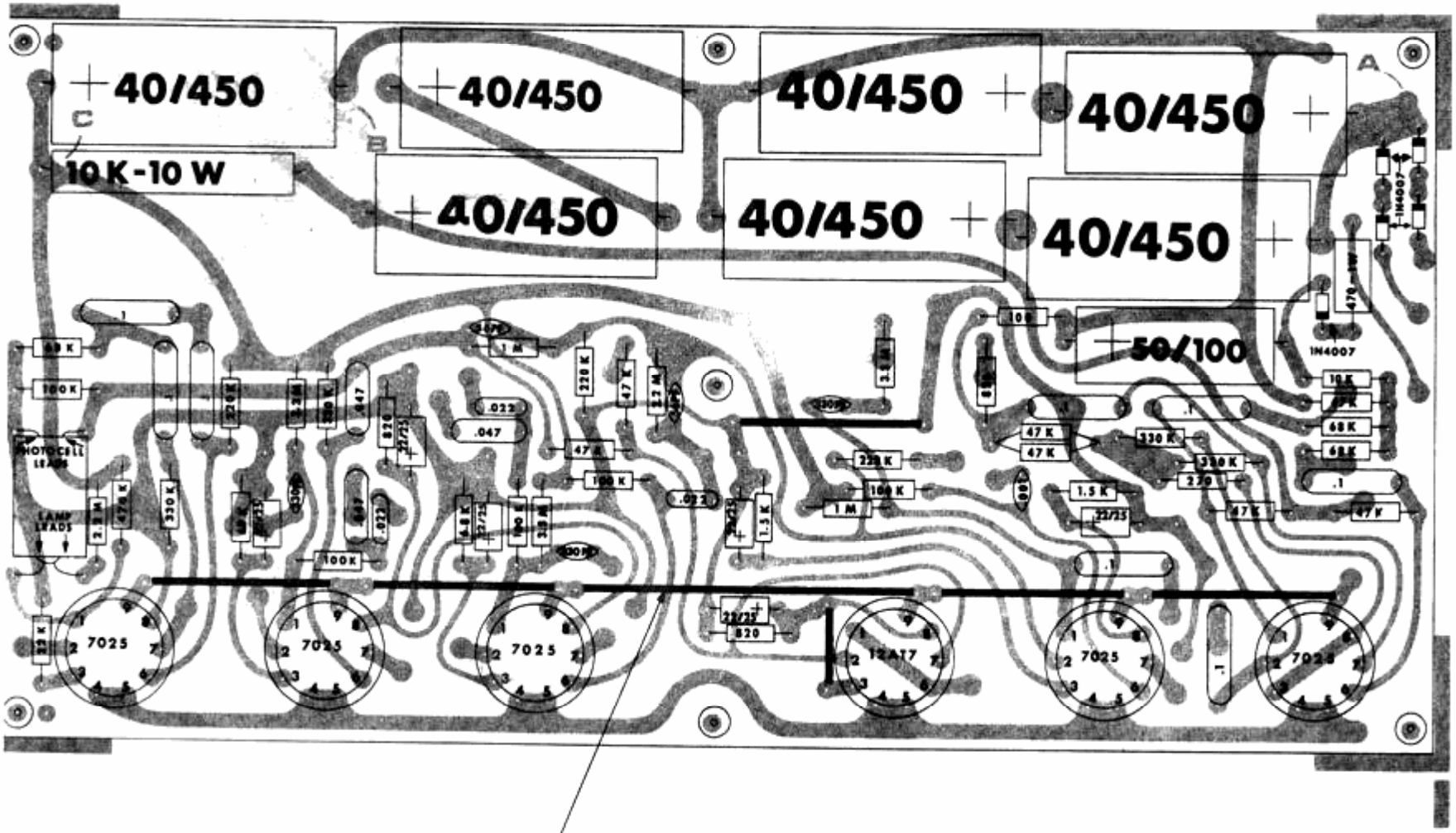

JUMPER (7 PLACES)

AIMS Personalized SOUND SYSTEMS	AIMS AMPLIFIERS, INC. PHOENIX, ARIZONA 85017	
	AIMS DUAL TWELVE	
	4/19/73	