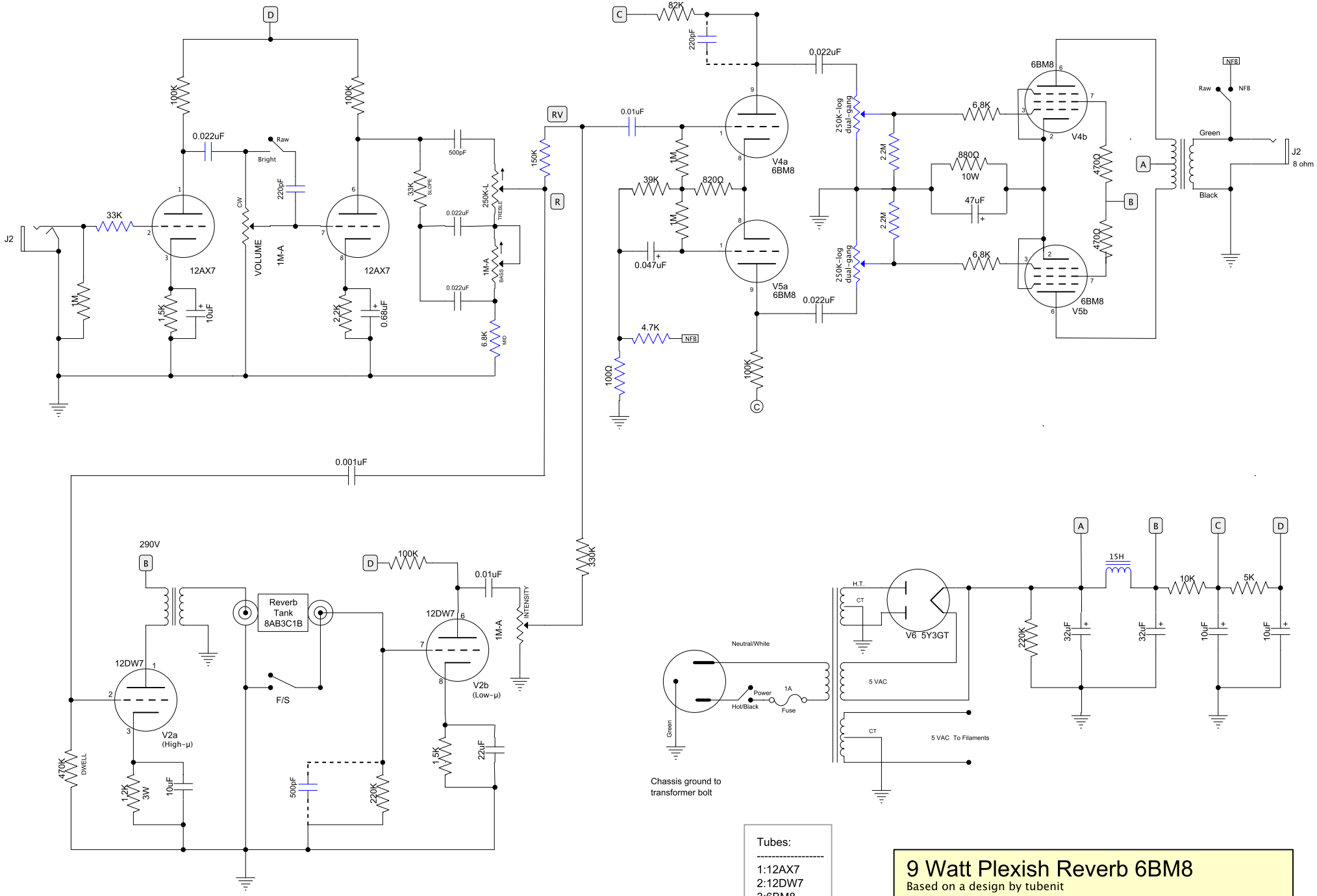

Tubes:

1:12AX7
2:12DW7
3:6BM8
4:6BM8
5:5Y3

9 Watt Plexish Reverb 6BM8

Based on a design by tubenit

Date: 09/20/2023