6V6 null pins 1, 6

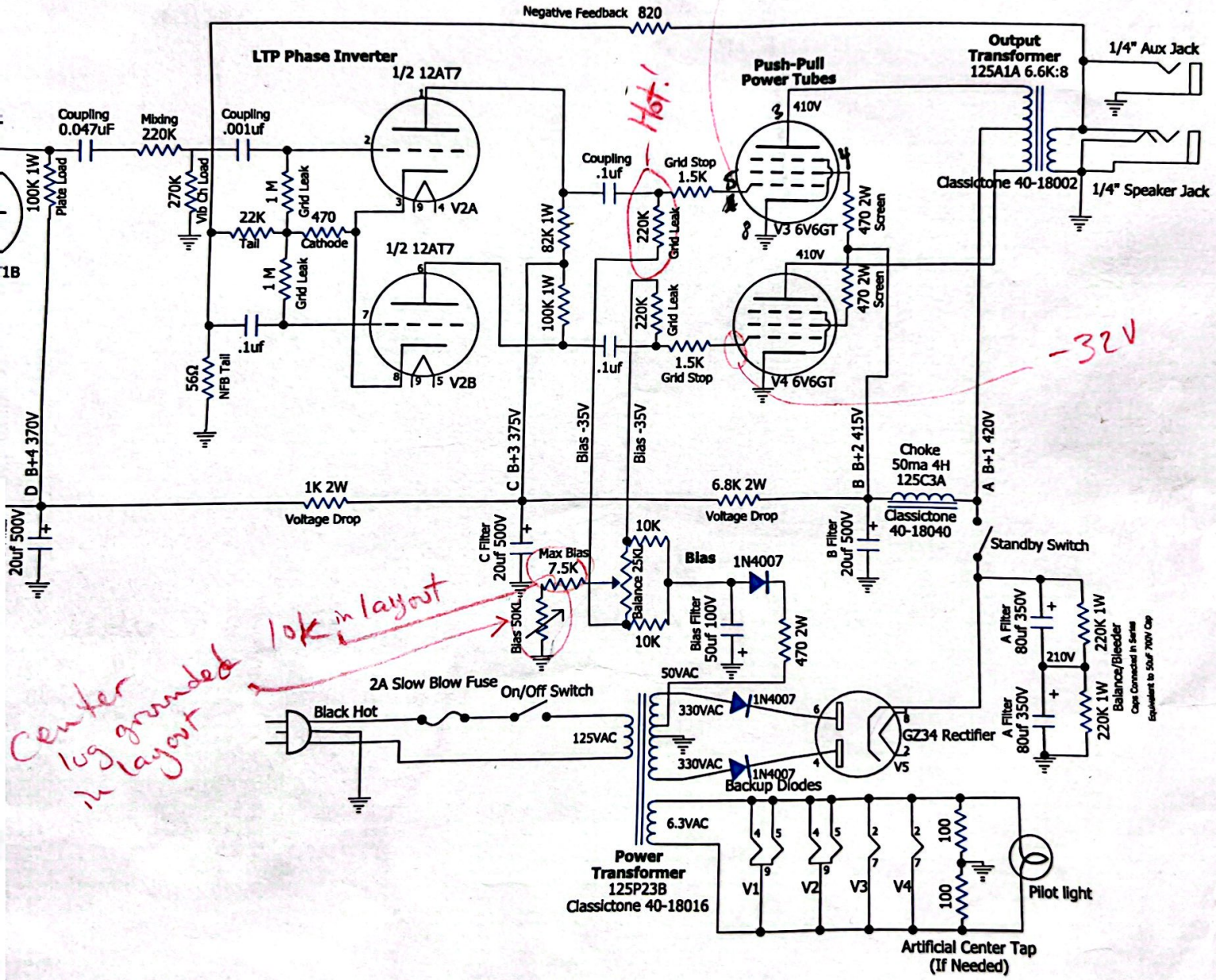

Scanned with CamScanner