REVISIONS			
REV.	DESCRIPTION	DATE	APPROVED
A	EC 2630	21-MAR-01	dBL
B	EC 2767	09-APR-02	dBL
C	EC 2871	06-JAN-03	dBL

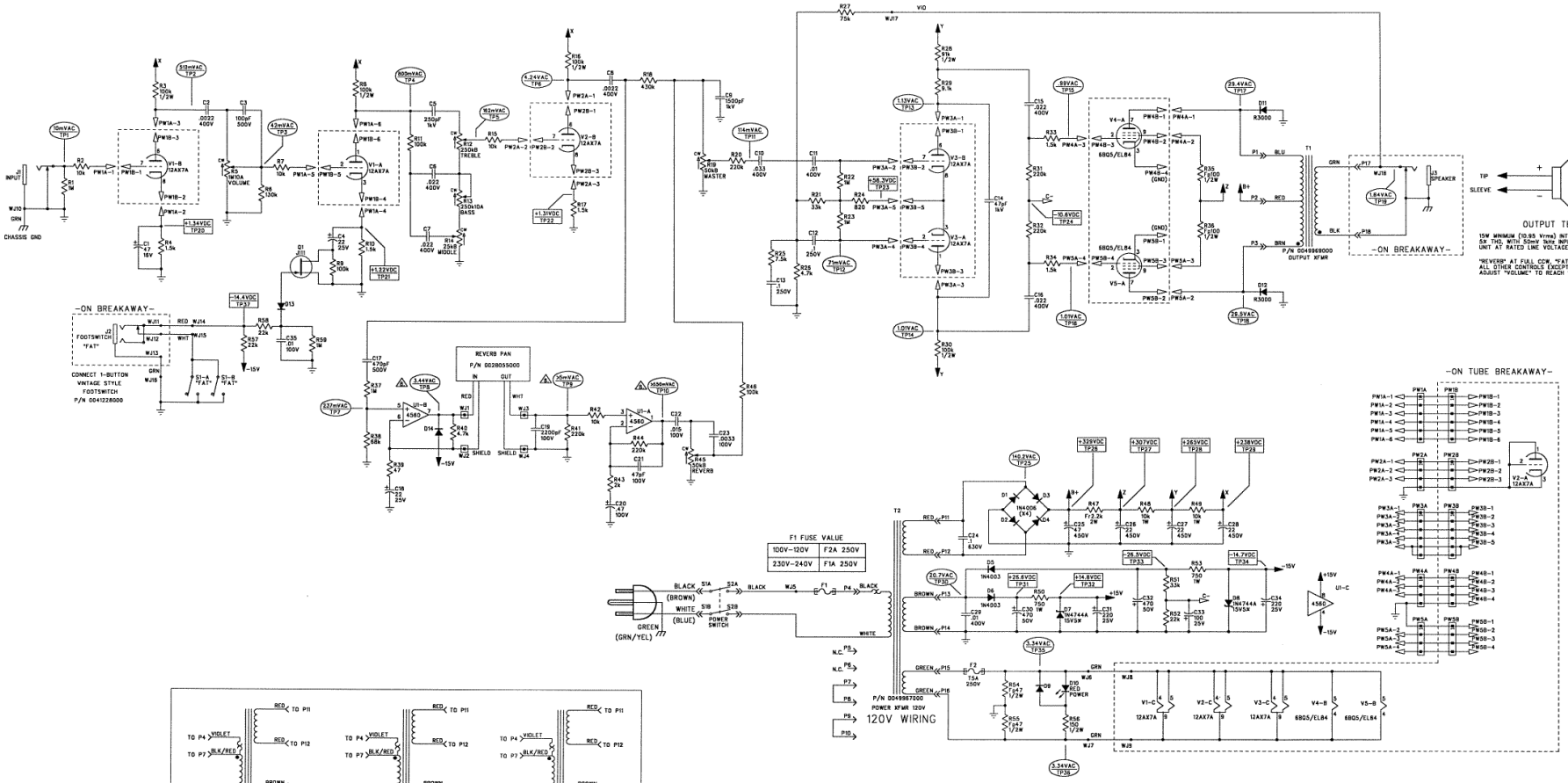

⚠ TP8 - TP10 VARY AND ARE DEPENDENT ON SPECIFIC EXCITATION FREQUENCY AND PARTICULAR REVERB PAN FREQUENCY RESPONSE.

7. AC AND DC VOLTAGES READ WITH RESPECT TO GROUND WITH A DVM UNDER THE FOLLOWING CONDITIONS:
   UNIT AT RATED LINE VOLTAGE
   NO INPUT SIGNAL (TP20-TP37 ONLY)
   VOLTAGES MAY VARY +/- 20%
   ADDITIONAL CONDITIONS FOR TP1-TP19:
   10mVrms, 1kHz SINEWAVE INPUT SIGNAL AT J1
   8Ω RESISTIVE LOAD CONNECTED AT J3
   REVERB PAN CONNECTED
   "REVERB" AT FULL CCW, "FAT" SWITCH OUT (OFF)
   ALL OTHER CONTROLS AT 50% ROTATION.
6. LAST REFERENCE: C35, D14, F2, J3, P18, R59, S1, T2, TP37, U1, V5, WJ18.
5. THIS SCHEMATIC IS FOR PCB FABRICATION P/N 0057376000 AND PCB ASSEMBLY P/N 0057277000.
4. ALL DIODES ARE IN4148.
3. ALL POLARIZED CAPACITORS IN uF, 20%; 50V MINIMUM.
2. ALL UNPOLARIZED CAPACITORS IN uF, 10% OR BETTER; 50V MINIMUM. (POWER SUPPLY BYPASS CAPACITORS ARE 20%).
1. ALL RESISTORS IN OHMS, 5%; 1/4W.

NOTES: (UNLESS OTHERWISE NOTED)

THIS DOCUMENT CONTAINS INFORMATION OF A PROPRIETARY NATURE TO FENDER MUSICAL INSTRUMENTS AND IS SUBMITTED TO YOU IN CONFIDENCE AND SHALL NOT BE DISCLOSED OR TRANSMITTED TO OTHERS WITHOUT AUTHORIZATION FROM FENDER MUSICAL INSTRUMENTS.

CHECKED BY: [illegible]
DATE: 20-JAN-03
APPROVED BY: [illegible]
DATE: 1/16/03
DRAWN: D. LEWIS ENGR: D. LEWIS
DATABASE FILE: Z4865.SCH

Fender® MUSICAL INSTRUMENTS
Corona, CA U.S.A.

TITLE: SERVICE DIAGRAM, COMBINED (schematic)
BLUES JUNIOR

SIZE	DRAWING NUMBER	REV.
D	0057275000	C

RELEASE DATE: 21-MAR-01 SHEET: 1 OF 2