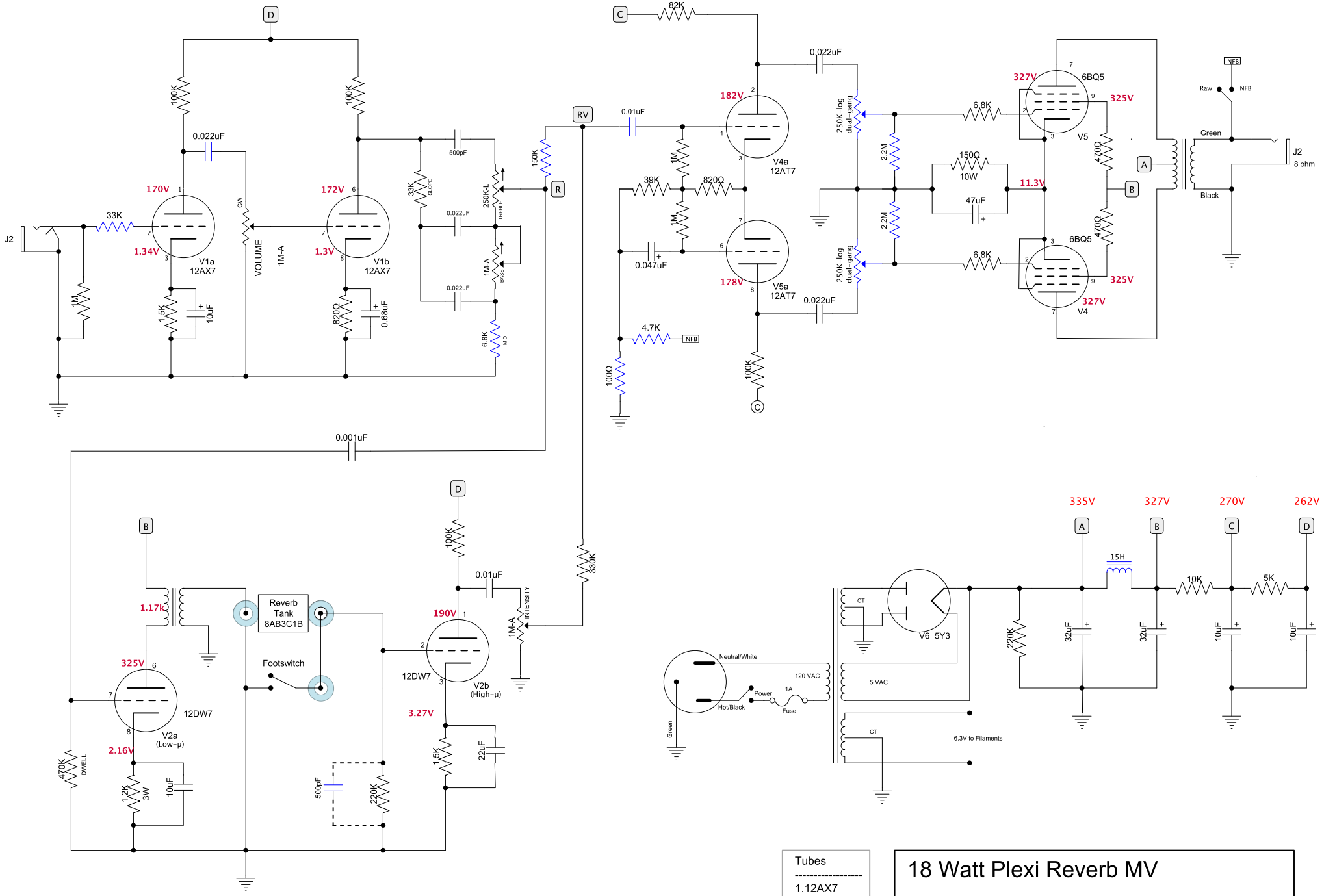

Tubes

1.12AX7
2.12DW7
3.12AX7
4.6BQ5
5.6BQ5
6.5Y3

18 Watt Plexi Reverb MV