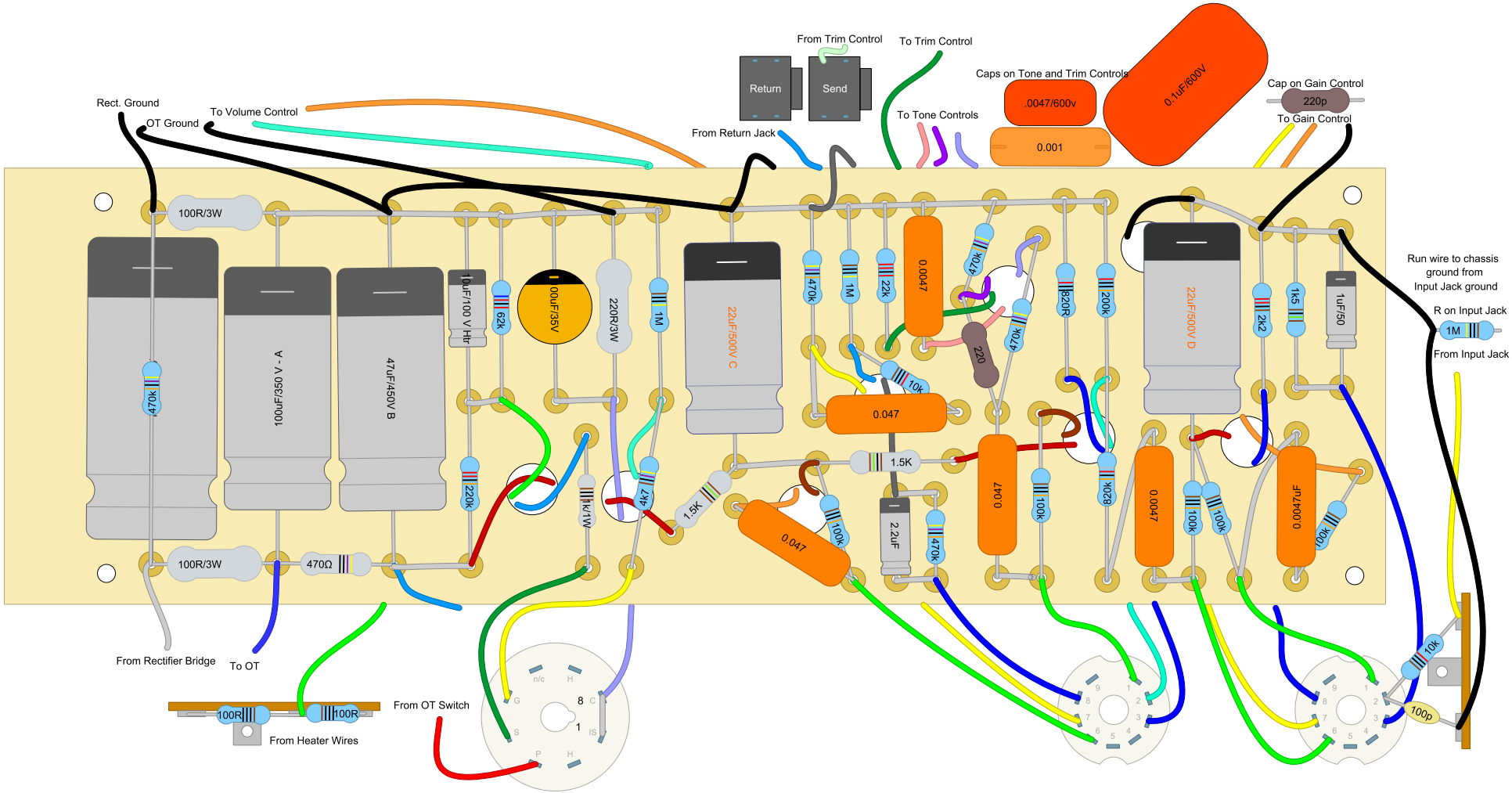
Rect. Ground
OT Ground
To Volume Control
From Trim Control
To Trim Control
Return
Send
From Return Jack
To Tone Controls
Caps on Tone and Trim Controls
.0047/600v
0.001
0.1uF/600V
Cap on Gain Control
220p
To Gain Control
Run wire to chassis ground from Input Jack ground
R on Input Jack
1M
From Input Jack
100R/3W
470k
100uF/350 V - A
47uF/450V B
10uF/100 V Htr
62k
100uF/35V
220R/3W
1M
22uF/500V C
470k
1M
22k
0.0047
470k
220
40k
10k
0.047
1.5K
820R
200k
22uF/500V D
2k2
1k5
1uF/50
220k
1M/1W
47k
1.5K
0.047
100k
2.2uF
470k
0.047
100k
820k
0.0047
100k
100k
0.0047uF
100k
100R/3W
470Ω
From Rectifier Bridge
To OT
100R
100R
From Heater Wires
From OT Switch
n/c
H
G
8
C
1
S
iS
P
H
10k
100p