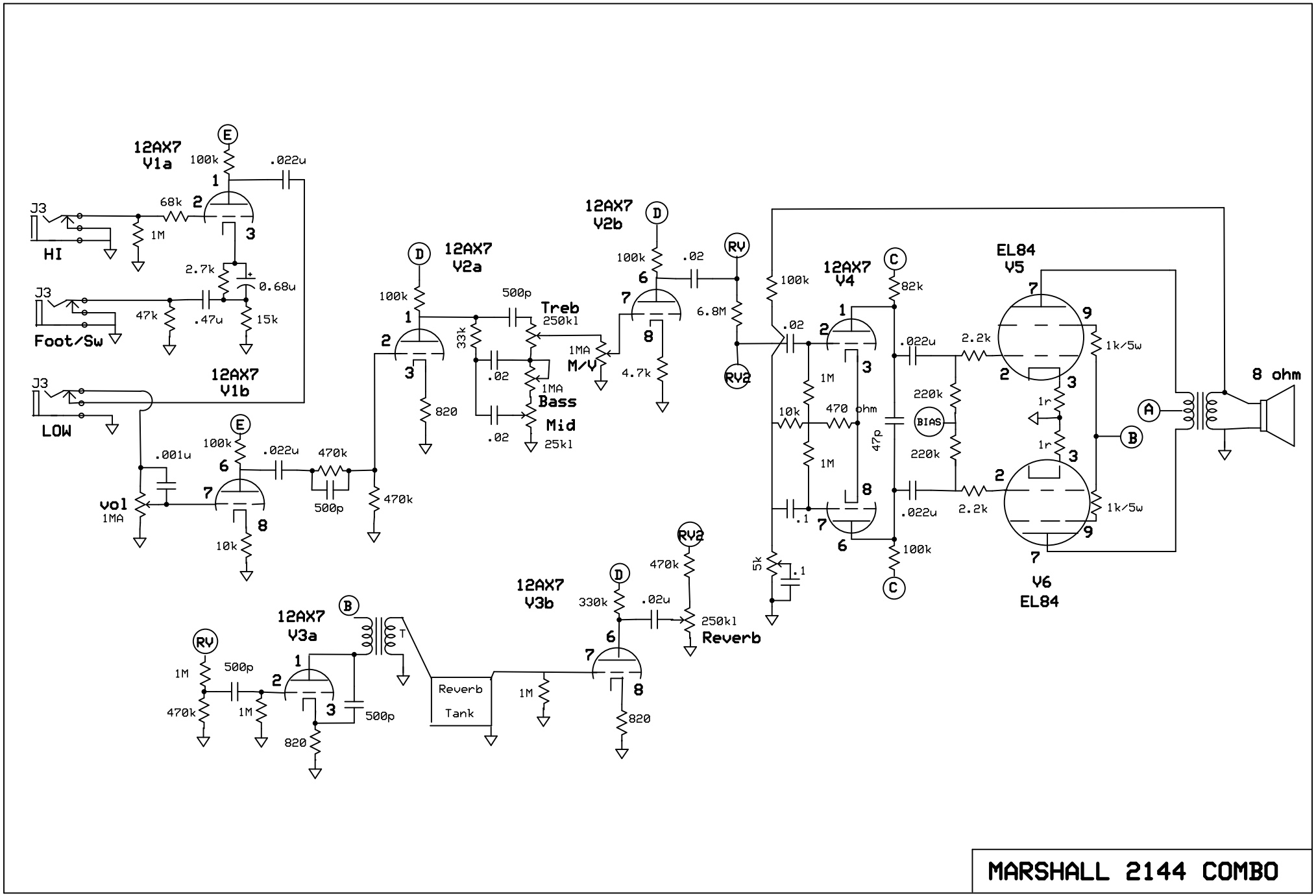

MARSHALL 2144 COMBO