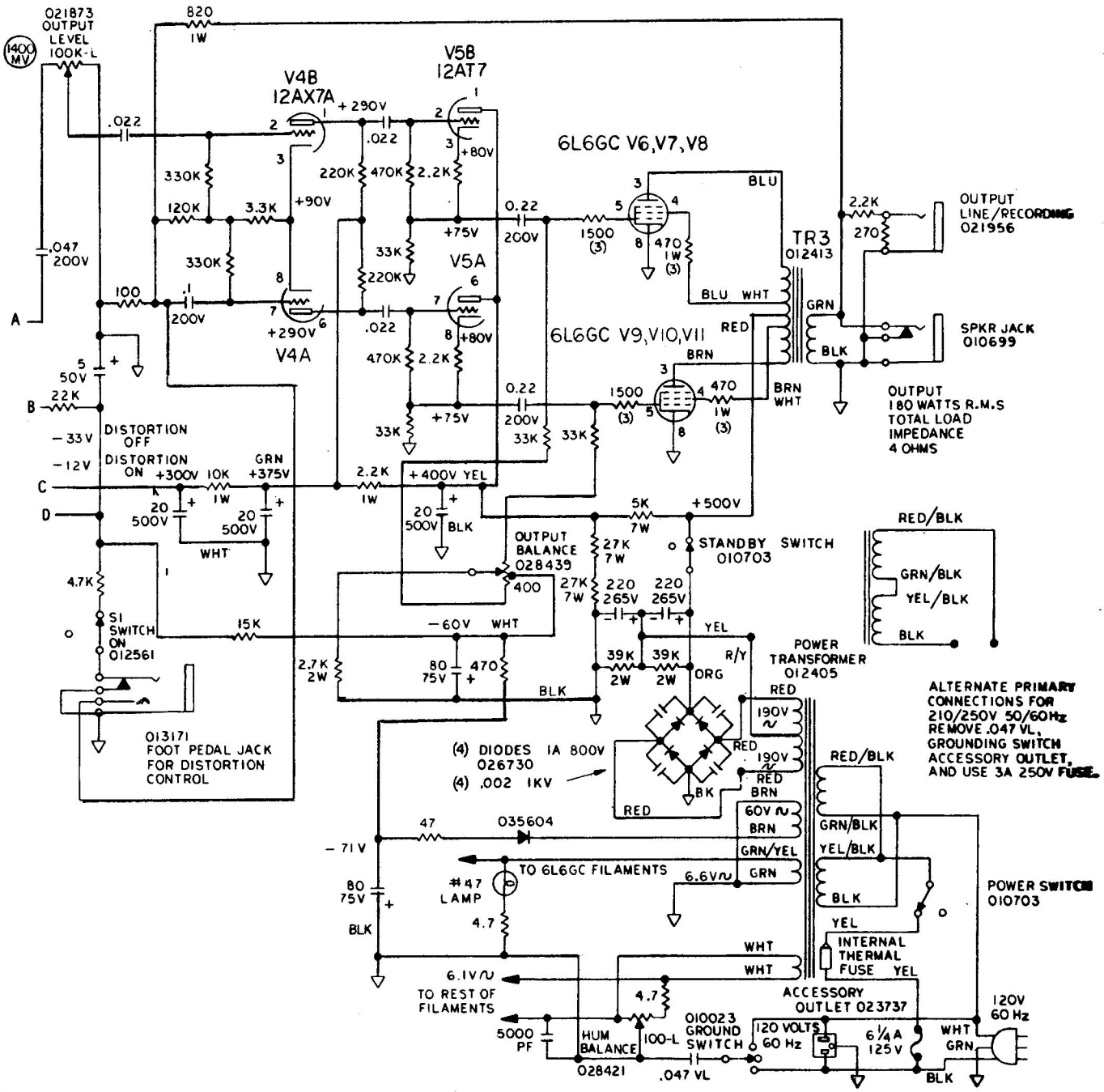

Fender Model Super Twin Guitar-Bass Amp