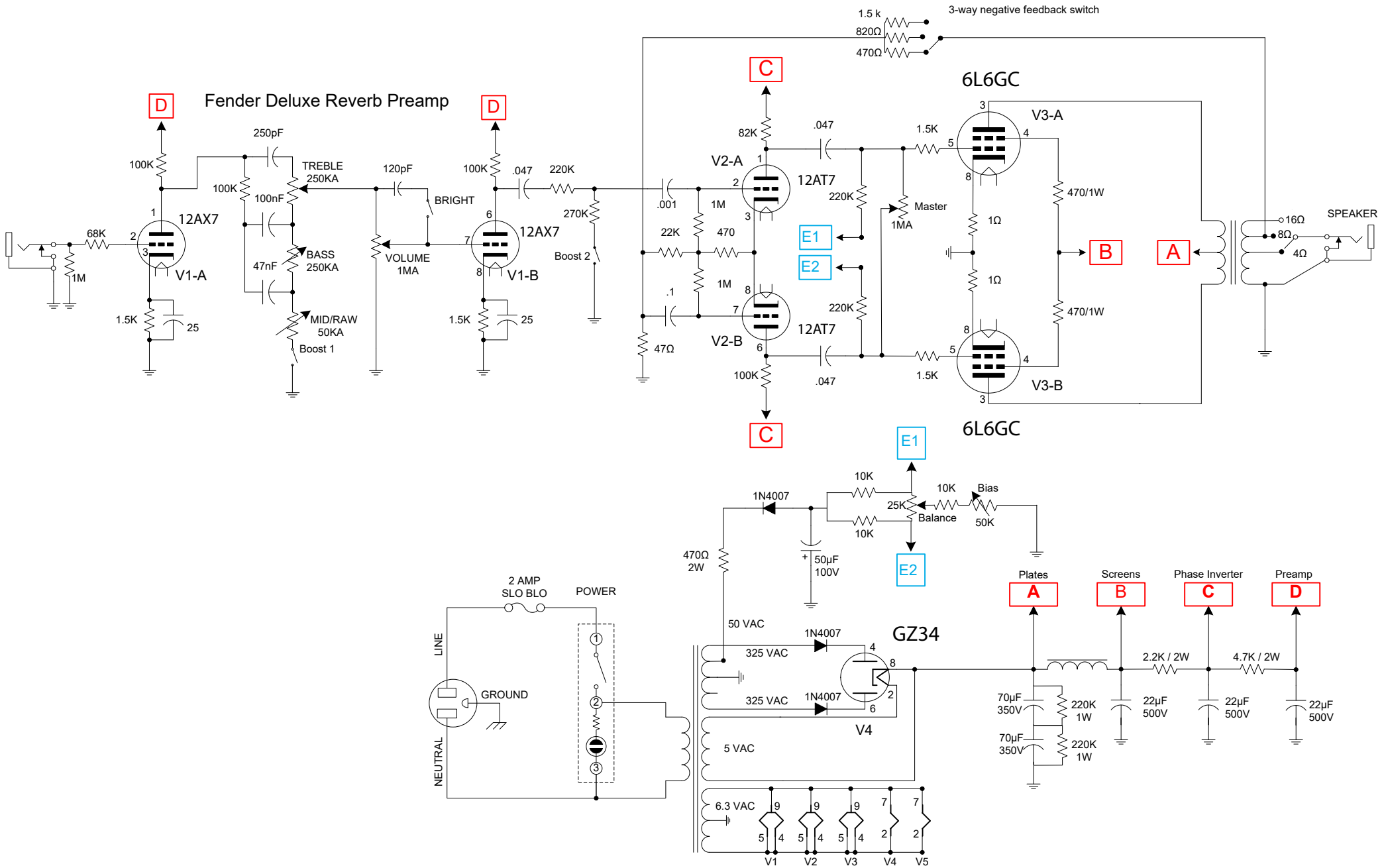
Fender Deluxe Reverb Preamp
3-way negative feedback switch
1.5 k
820Ω
470Ω
6L6GC
6L6GC
GZ34
12AX7
V1-A
12AX7
V1-B
V2-A
12AT7
V2-B
12AT7
V3-A
V3-B
V4
TREBLE 250KA
BASS 250KA
MID/RAW 50KA
VOLUME 1MA
BRIGHT
Boost 1
Boost 2
Master 1MA
Bias 50K
Balance
SPEAKER
16Ω
8Ω
4Ω
2 AMP SLO BLO
POWER
LINE
GROUND
NEUTRAL
50 VAC
325 VAC
5 VAC
6.3 VAC
Plates
Screens
Phase Inverter
Preamp
2.2K / 2W
4.7K / 2W
22μF 500V
70μF 350V
220K 1W
470/1W
1N4007
50μF 100V
470Ω 2W
V1
V2
V3
V4
V5