NATIONAL-DOBRO CORP.

MODEL 100

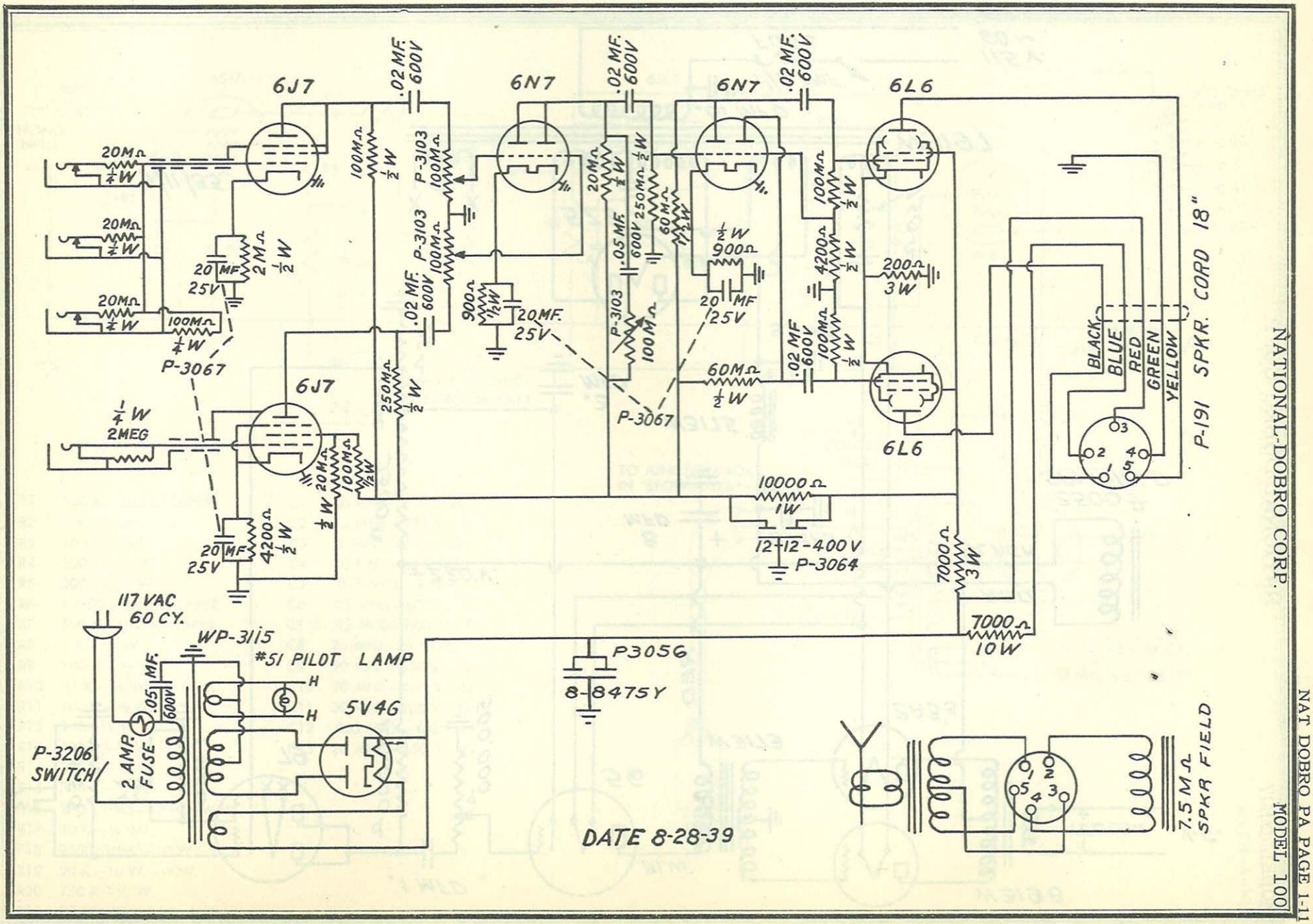

©John F. Rider