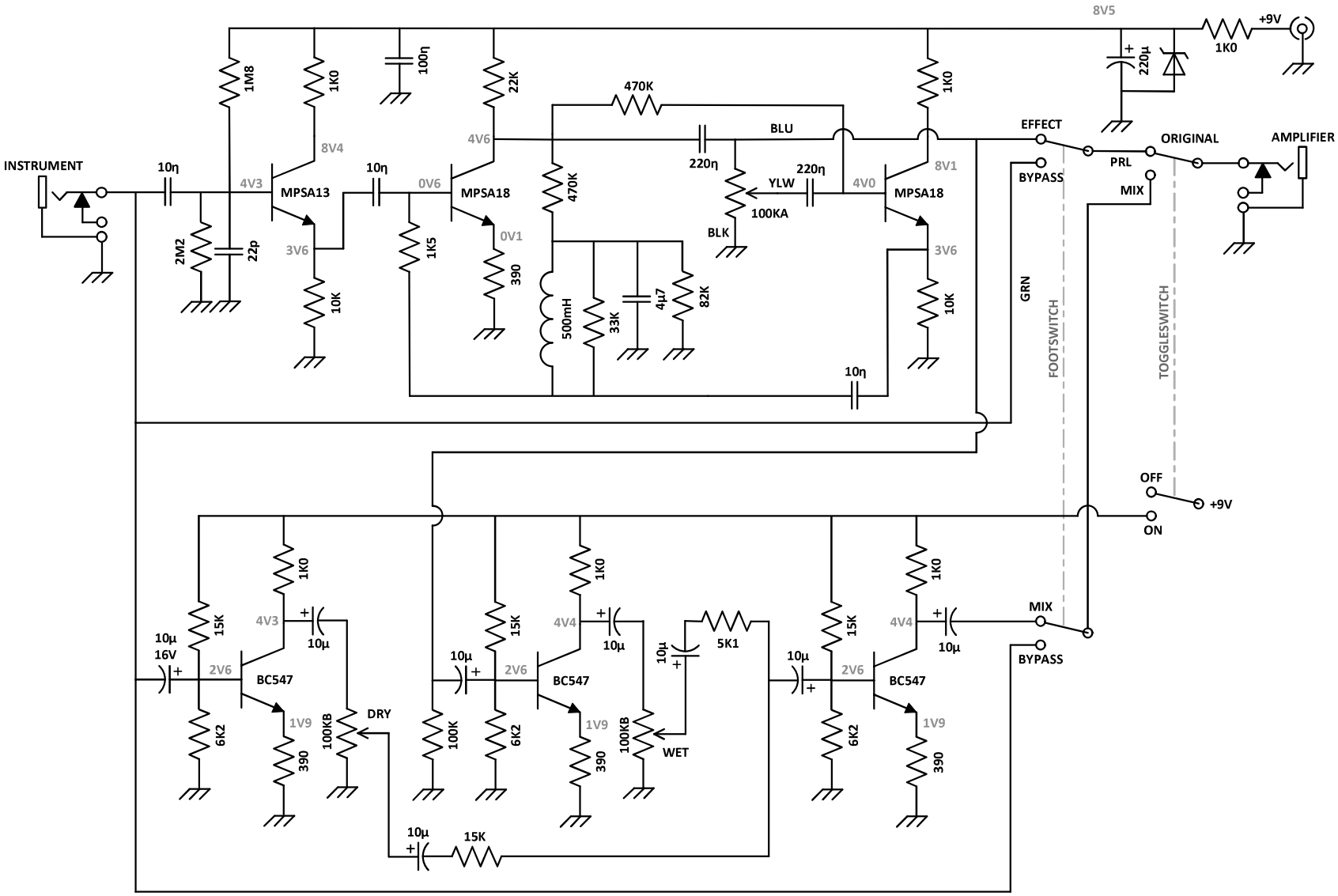
INSTRUMENT
10η
2M2
22p
1M8
4V3
MPSA13
8V4
1K0
3V6
10K
100η
10η
1K5
0V6
MPSA18
0V1
390
22K
4V6
470K
470K
500mH
33K
4μ7
82K
BLU
220η
YLW
220η
100KA
BLK
10η
1K0
4V0
MPSA18
8V1
3V6
10K
8V5
220μ
1K0
+9V
EFFECT
BYPASS
PRL
MIX
ORIGINAL
AMPLIFIER
GRN
FOOTSWITCH
TOGGLESWITCH
OFF
+9V
ON
10μ
16V
15K
2V6
BC547
4V3
1K0
10μ
6K2
1V9
390
100KB
DRY
10μ
15K
100K
15K
2V6
BC547
4V4
1K0
10μ
6K2
1V9
390
100KB
WET
10μ
5K1
10μ
15K
2V6
BC547
4V4
1K0
10μ
6K2
1V9
390
MIX
BYPASS