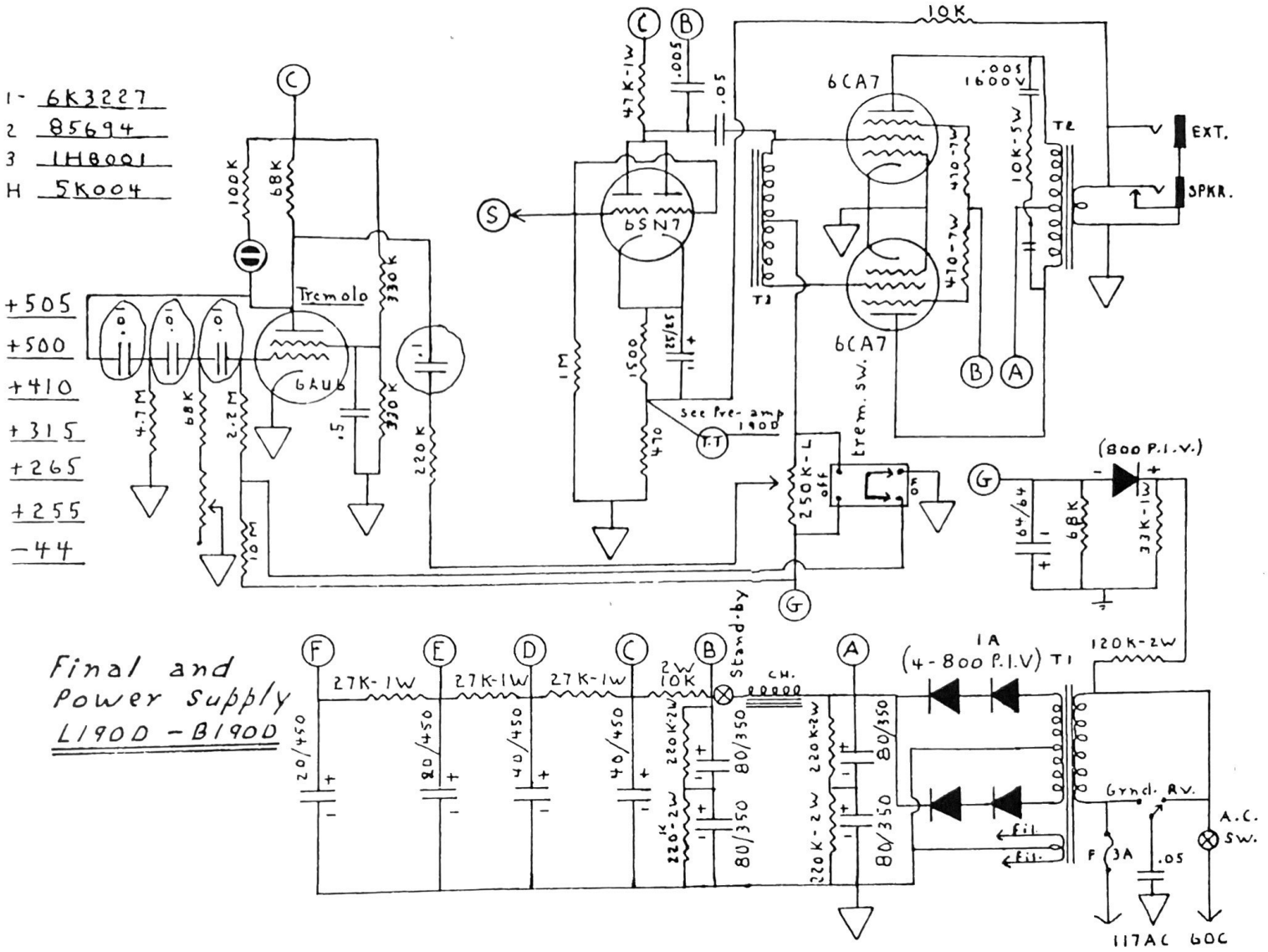
1- 6K3227
2 85694
3 1H8001
H 5K004
+505
+500
+410
+315
+265
+255
-44
Tremolo
6AU6
6SN7
6CA7
6CA7
T1
T2
T3
EXT.
SPKR.
trem. sw.
off
on
See Pre-amp 1900
T.T
S
C
B
A
G
F
E
D
Stand-by
CH.
(800 P.I.V.)
1A
(4-800 P.I.V.) T1
120K-2W
Gnd. RV.
A.C. SW.
F 3A
117AC 60C
Fil.
Final and Power Supply L190D - B190D