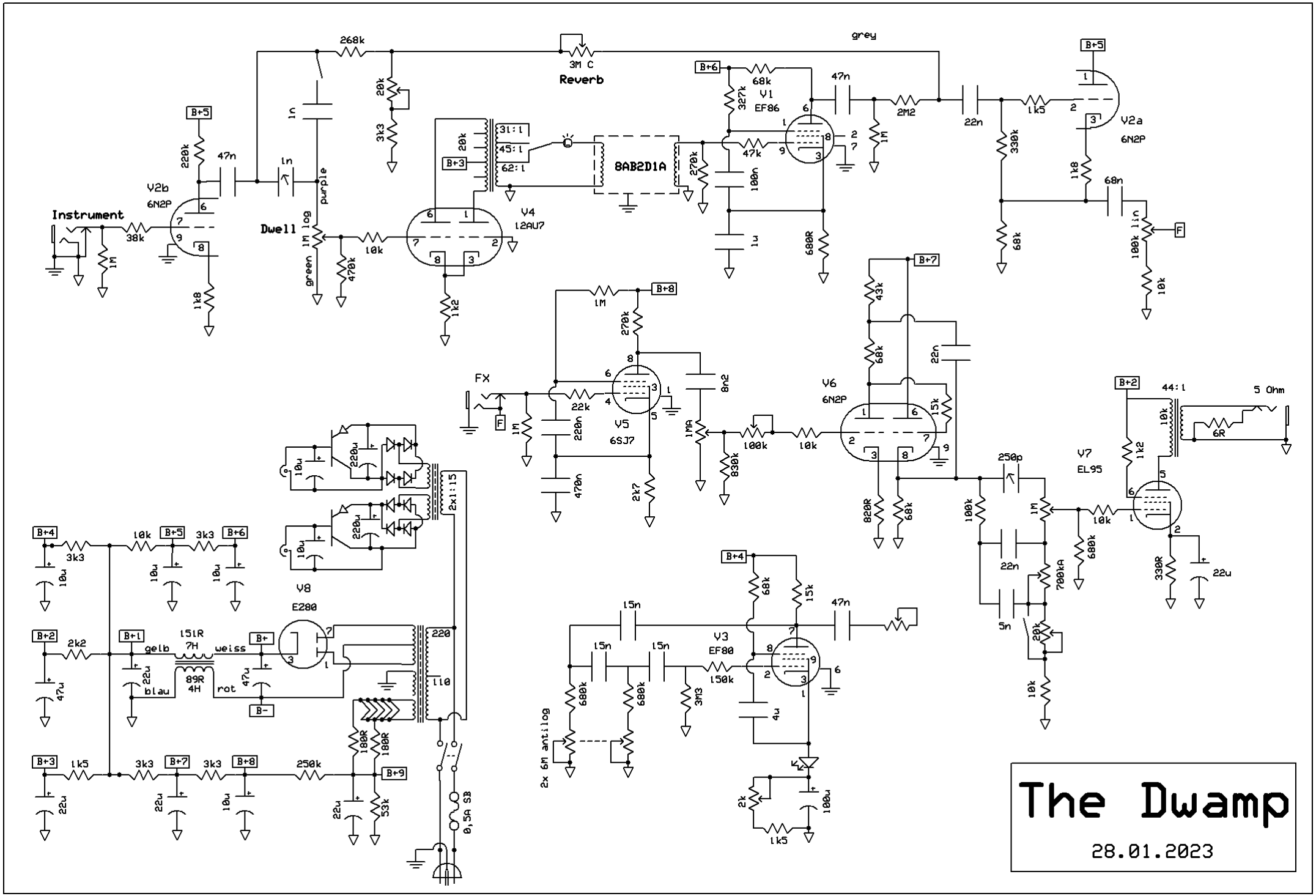
Instrument
Dwell
Reverb
3M C
V1
EF86
V2a
6N2P
V2b
6N2P
V3
EF80
V4
12AU7
V5
6SJ7
V6
6N2P
V7
EL95
V8
E280
8AB2D1A
FX
5 Ohm
44:1
2x1:15
220
110
0,5A SB
2x 6M antilog
B+
B-
B+1
B+2
B+3
B+4
B+5
B+6
B+7
B+8
B+9
grey
purple
green
blau
gelb
weiss
rot
151R
7H
89R
4H
The Dwamp
28.01.2023