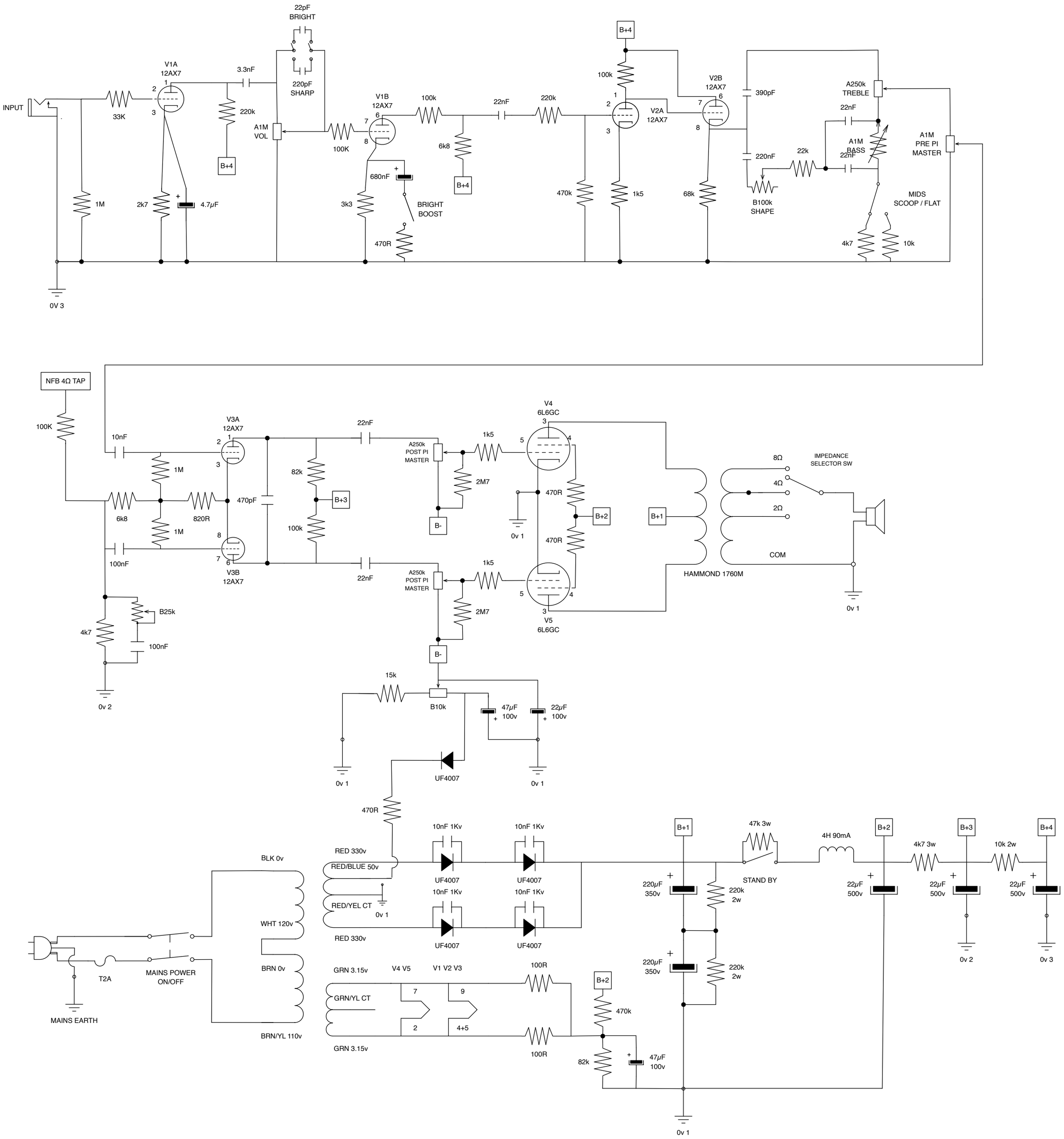


BIG BROWN
REVISION A
21042024
MEELECTRONICS