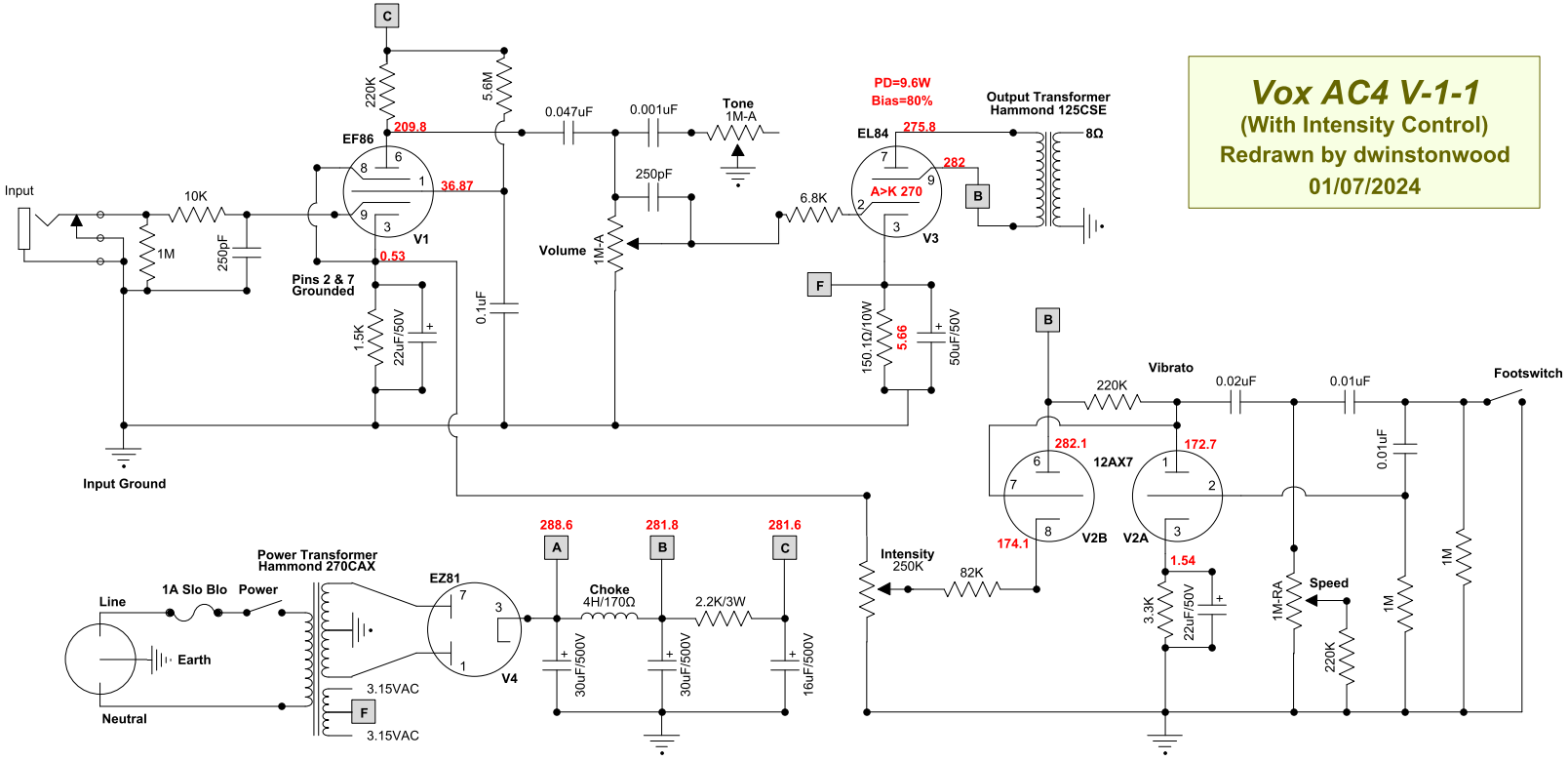
Vox AC4 V-1-1
(With Intensity Control)
Redrawn by dwinstonwood
01/07/2024
Input
10K
1M
250pF
EF86
V1
220K
5.6M
209.8
36.87
0.53
Pins 2 & 7
Grounded
1.5K
22uF/50V
0.1uF
0.047uF
0.001uF
Tone
1M-A
250pF
Volume
1M-A
6.8K
PD=9.6W
Bias=80%
EL84
275.8
282
A>K 270
V3
Output Transformer
Hammond 125CSE
8Ω
150.1Ω/10W
5.66
50uF/50V
Input Ground
Vibrato
220K
0.02uF
0.01uF
Footswitch
282.1
12AX7
172.7
V2B
V2A
174.1
1.54
0.01uF
Intensity
250K
82K
3.3K
22uF/50V
1M-RA
Speed
220K
1M
1M
Power Transformer
Hammond 270CAX
Line
1A Slo Blo
Power
Earth
Neutral
EZ81
V4
3.15VAC
3.15VAC
288.6
281.8
281.6
Choke
4H/170Ω
2.2K/3W
30uF/500V
30uF/500V
16uF/500V