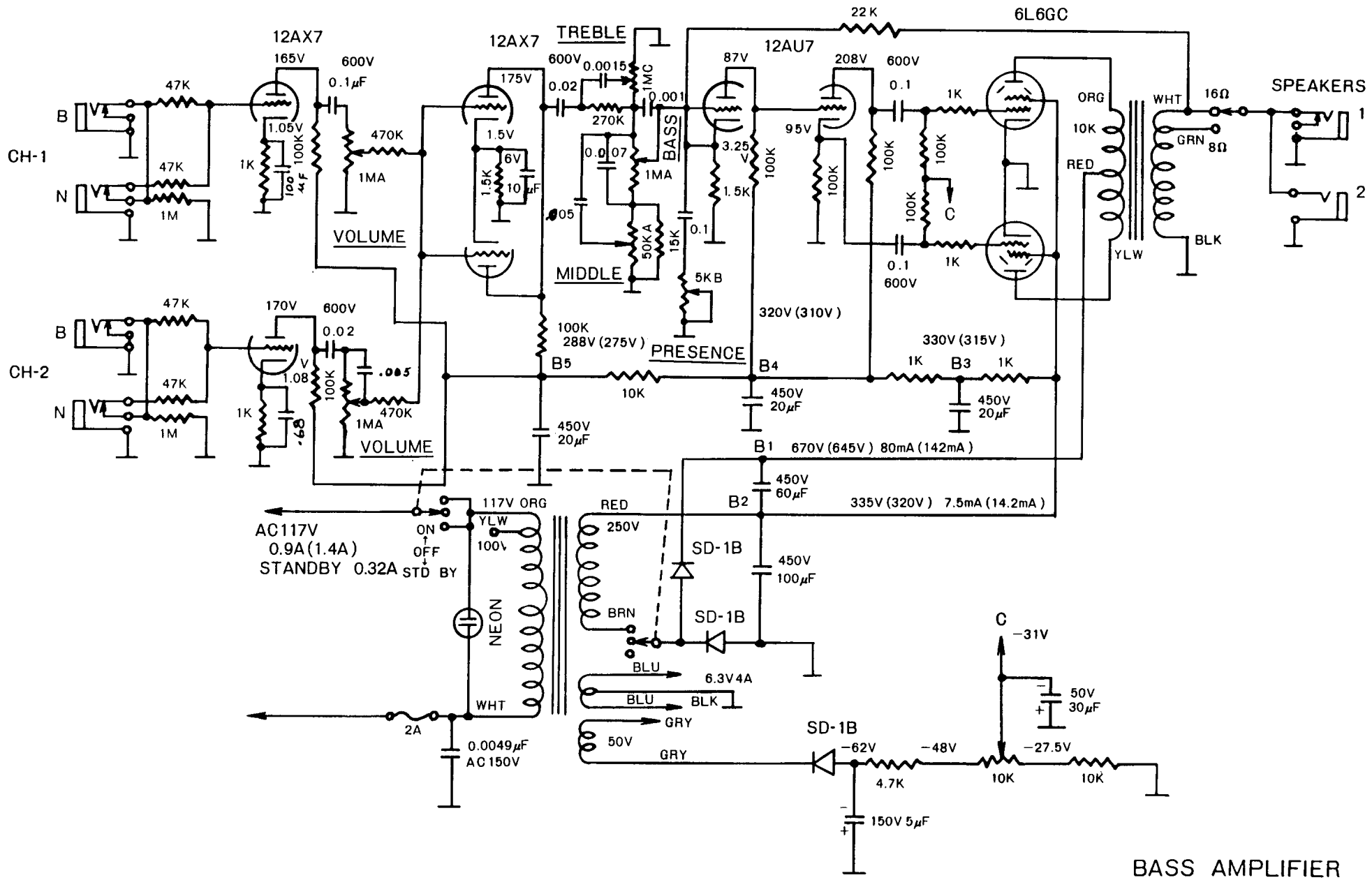

BASS AMPLIFIER

U-1246

UNICORD INCORPORATED

A GULF + WESTERN COMPANY

MAY 1971