SCHEMATIC PART 2 OF 3

AFTER REVERB WASH MOD.

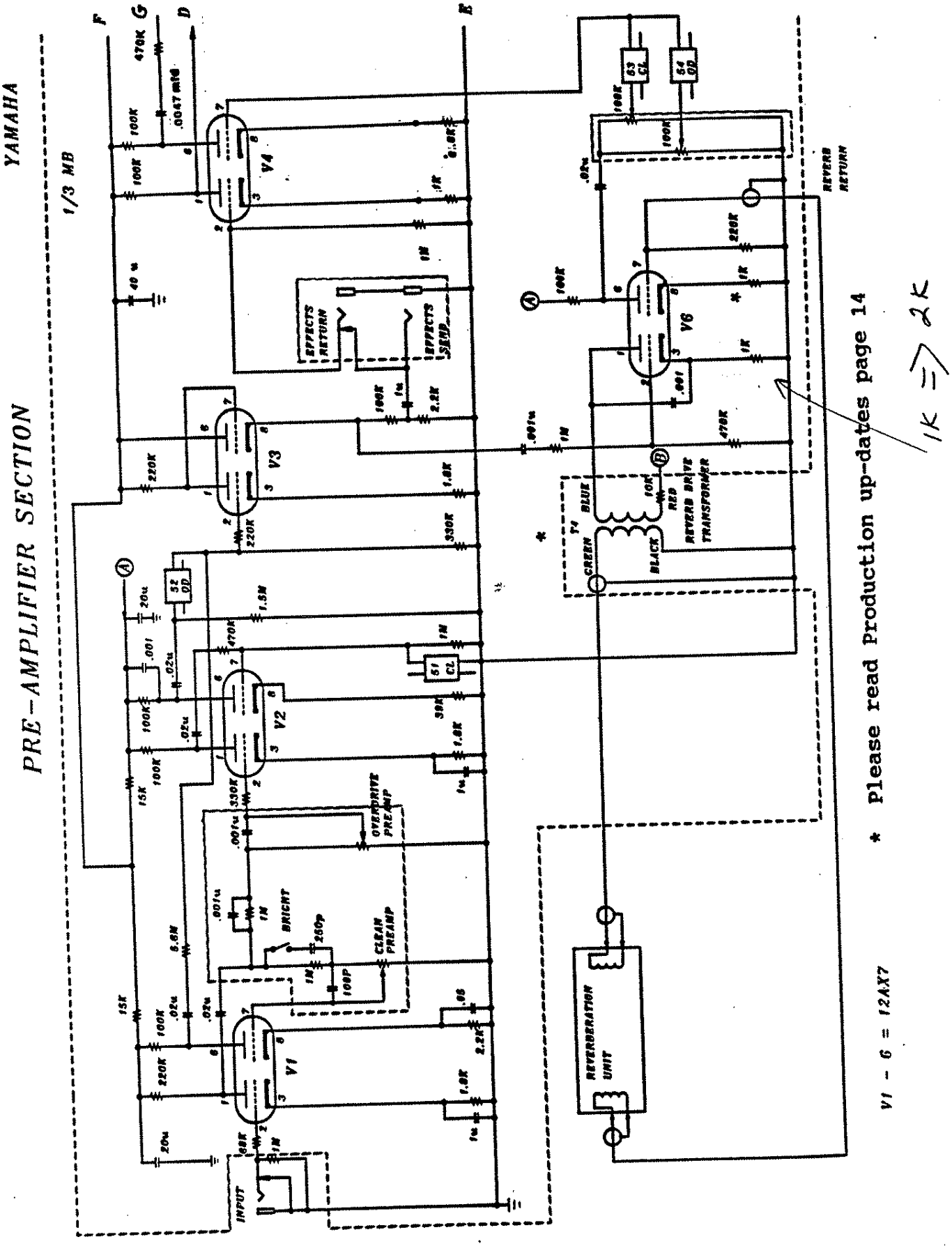

* Please read Production up-dates page 14

V1 - 6 = 12AX7