Tubenit Marshall 18W Minimalist Reverb
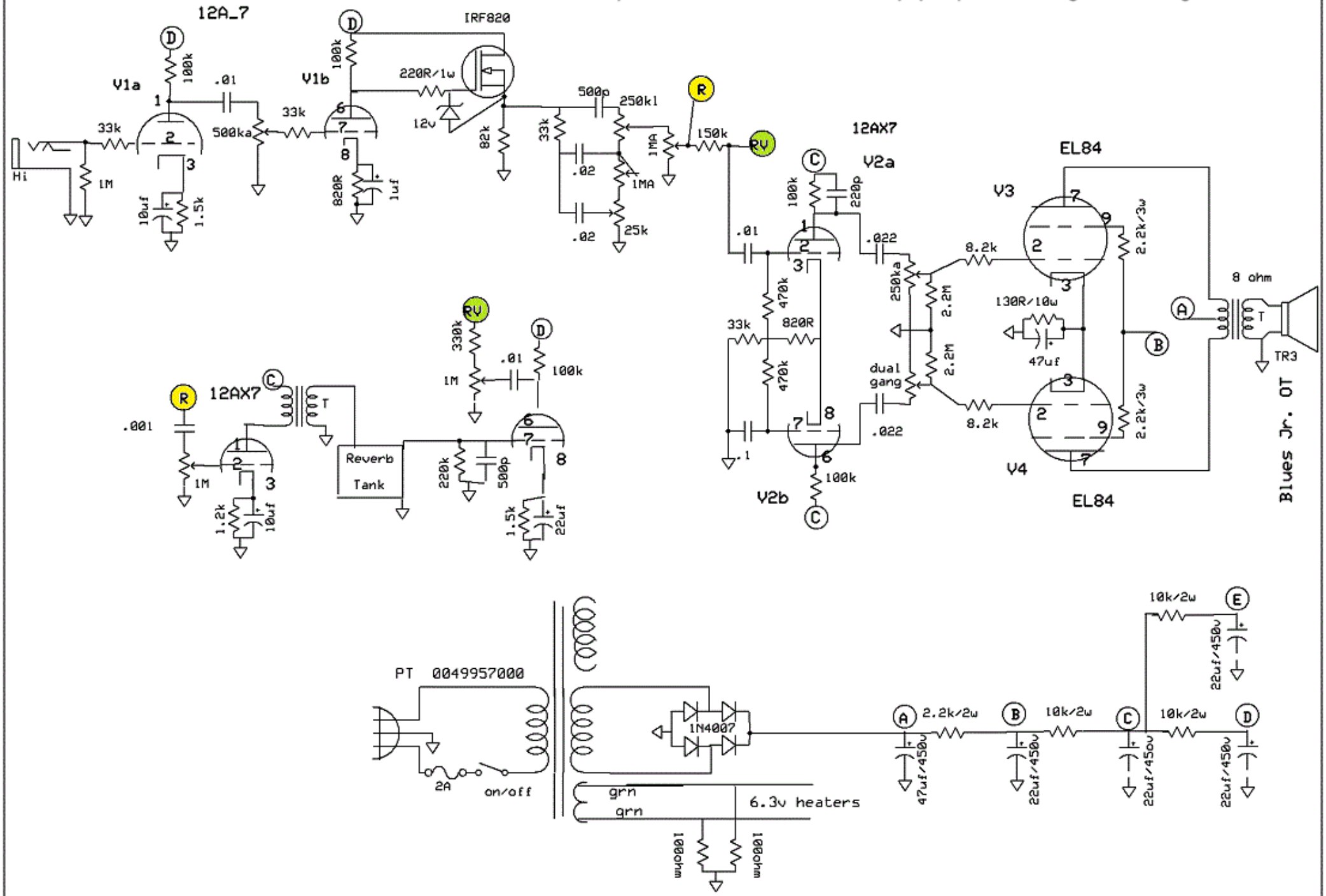
https://el34world.com/Forum/index.php?topic=7957.msg301849#msg301849