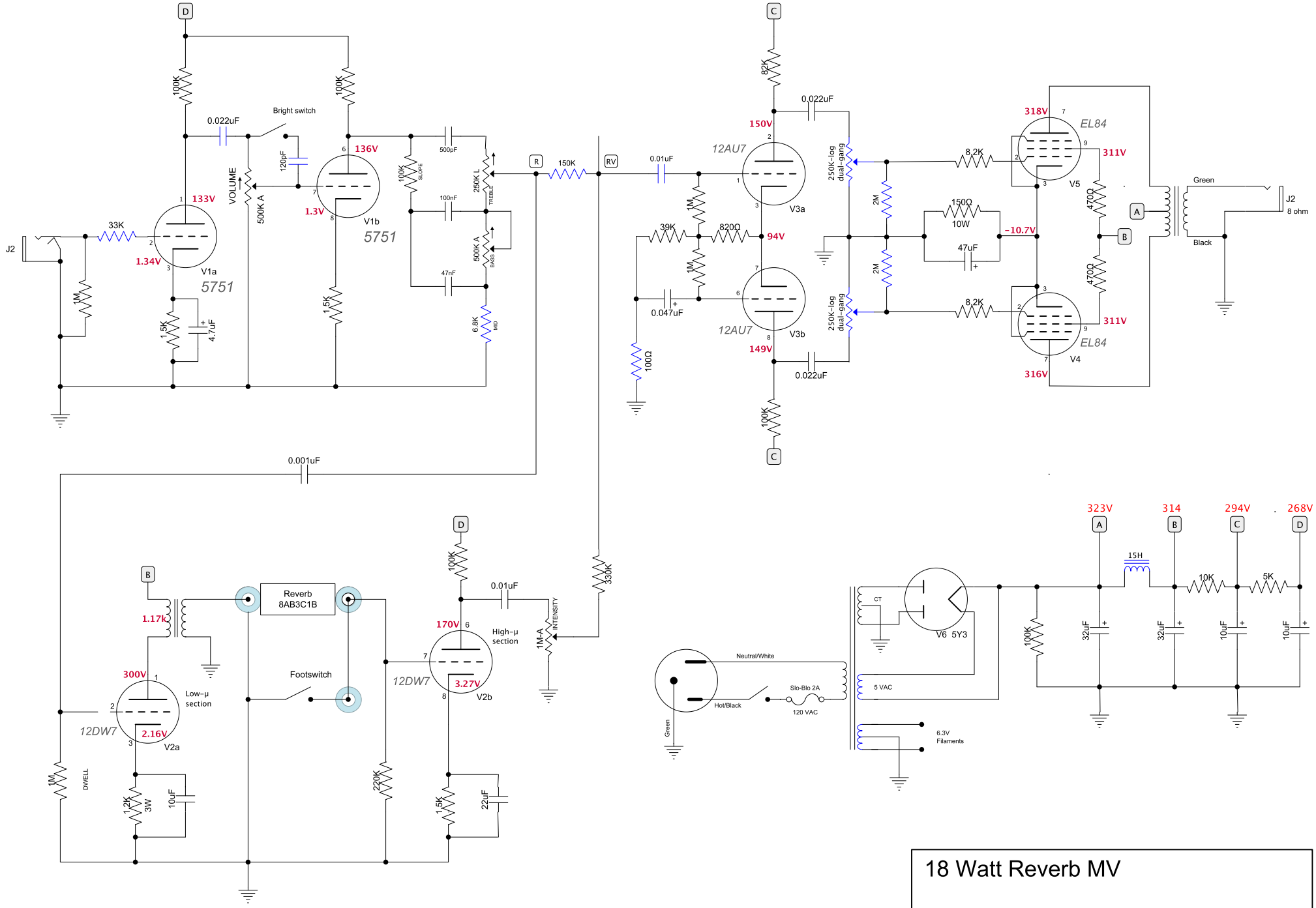
18 Watt Reverb MV
V1a
5751
V1b
5751
V3a
12AU7
V3b
12AU7
V5
EL84
V4
EL84
V6 5Y3
V2a
12DW7
V2b
12DW7
Reverb
8AB3C1B
Footswitch
Bright switch
VOLUME
500K A
TREBLE
BASS
MID
SLOPE
INTENSITY
DWELL
Low-μ
section
High-μ
section
250K-log
dual-gang
Green
Black
J2
8 ohm
Neutral/White
Hot/Black
Slo-Blo 2A
120 VAC
5 VAC
6.3V
Filaments
CT
15H
323V
314
294V
268V
318V
311V
311V
316V
-10.7V
150V
94V
149V
136V
133V
1.3V
1.34V
170V
3.27V
300V
2.16V
1.17k
0.001uF
0.022uF
0.01uF
0.047uF
150K
330K
82K
100K
33K
1M
39K
820Ω
100Ω
150Ω
10W
47uF
8.2K
2M
470Ω
1.5K
4.7uF
120pF
500pF
100nF
47nF
6.8K
250K L
500K A
1M-A
1.2K
3W
10uF
220K
22uF
32uF
10uF
10K
5K