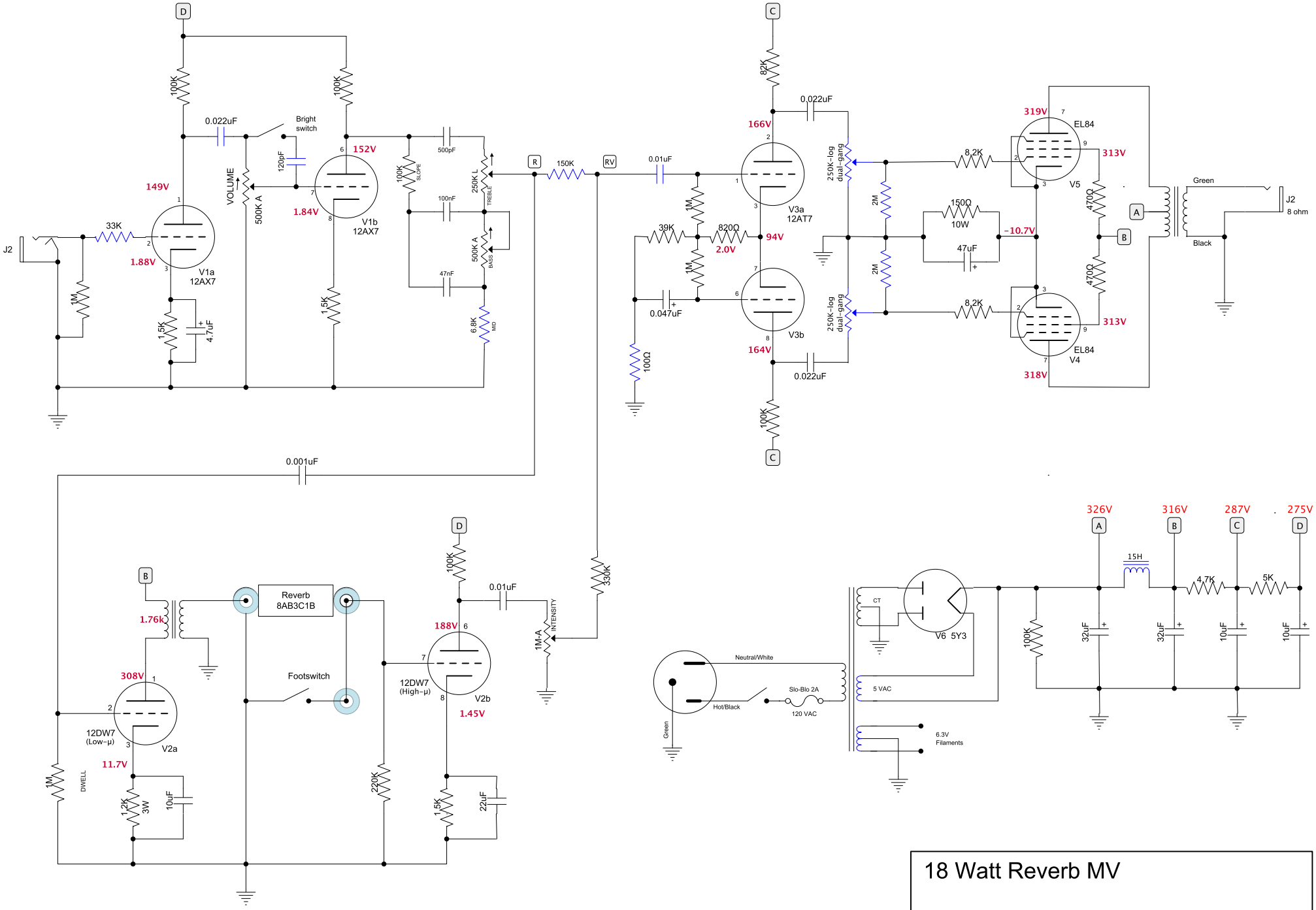
18 Watt Reverb MV
V1a
12AX7
V1b
12AX7
V3a
12AT7
V3b
V5
EL84
V4
EL84
V6 5Y3
V2a
12DW7
(Low-μ)
V2b
12DW7
(High-μ)
Reverb
8AB3C1B
Footswitch
Bright
switch
VOLUME
500K A
250K L
TREBLE
500K A
BASS
6.8K
MID
100K
SLOPE
DWELL
INTENSITY
1M-A
250K-log
dual-gang
J2
8 ohm
Green
Black
Neutral/White
Hot/Black
Slo-Blo 2A
120 VAC
5 VAC
6.3V
Filaments
CT
15H
326V
316V
287V
275V
319V
313V
318V
313V
166V
164V
94V
2.0V
149V
1.88V
1.84V
152V
1.76k
308V
11.7V
188V
1.45V
-10.7V