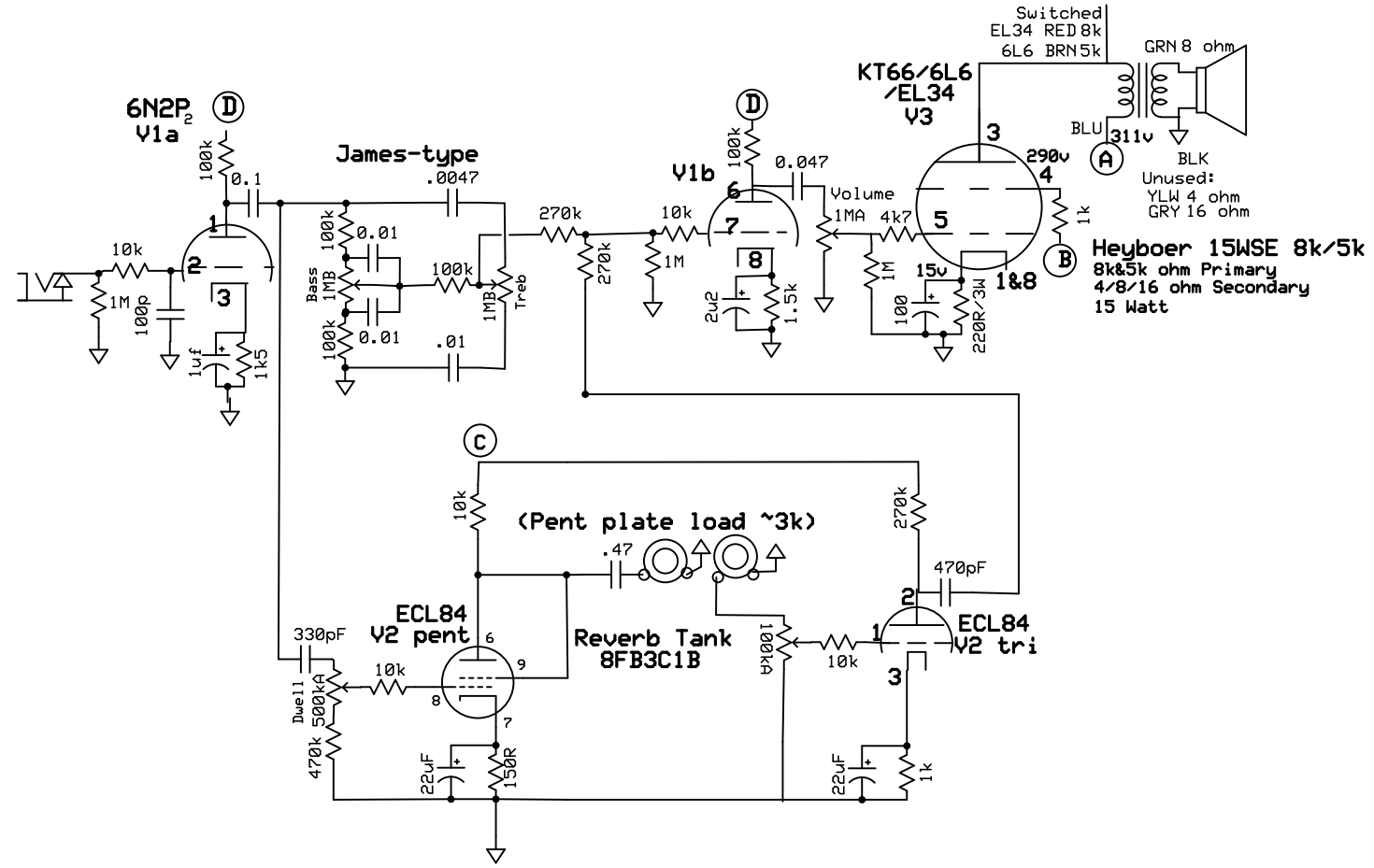

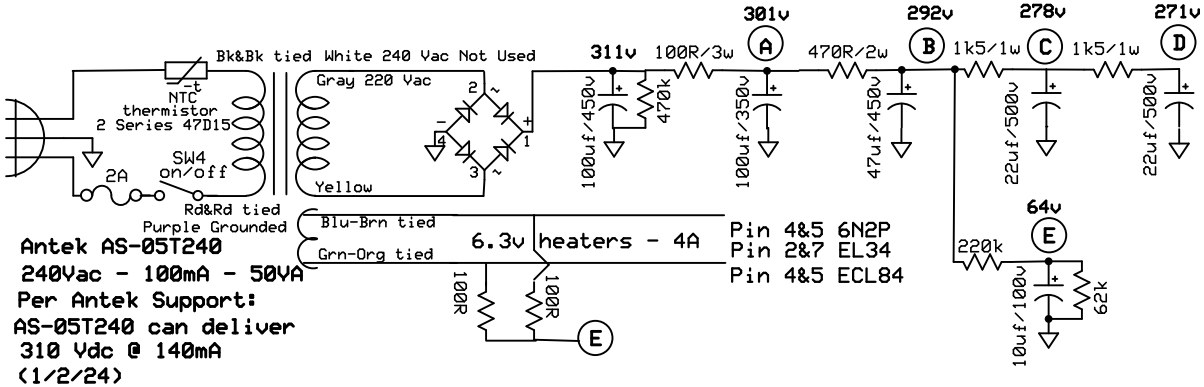

Note:
Gound Pin 9 on 6N2P

Tordensen Reverb KT66 6N2P		
Boodle	Rev 1 7/1/2024	Page 1 of 1