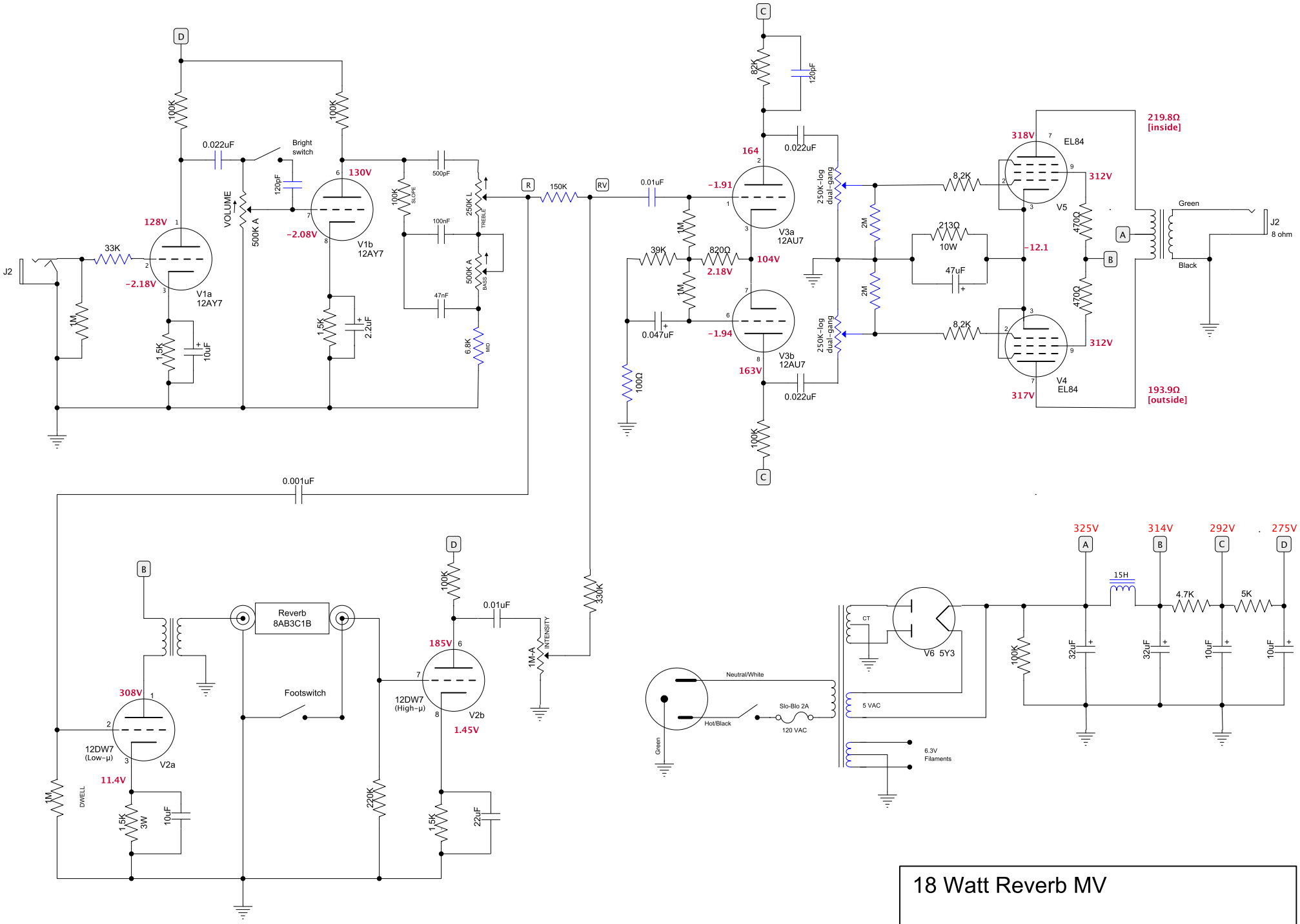
18 Watt Reverb MV
V1a 12AY7
V1b 12AY7
V2a 12DW7 (Low-μ)
V2b 12DW7 (High-μ)
Reverb 8AB3C1B
Footswitch
Bright switch
VOLUME
500K A
SLOPE
TREBLE
BASS
MID
DWELL
INTENSITY
V3a 12AU7
V3b 12AU7
250K-log dual-gang
V4 EL84
V5 EL84
V6 5Y3
J2
8 ohm
Green
Black
Neutral/White
Hot/Black
Slo-Blo 2A
120 VAC
5 VAC
6.3V Filaments
CT
15H
325V
314V
292V
275V
219.8Ω [inside]
193.9Ω [outside]
128V
-2.18V
-2.08V
130V
185V
308V
11.4V
1.45V
164
-1.91
104V
2.18V
-1.94
163V
318V
312V
-12.1
317V