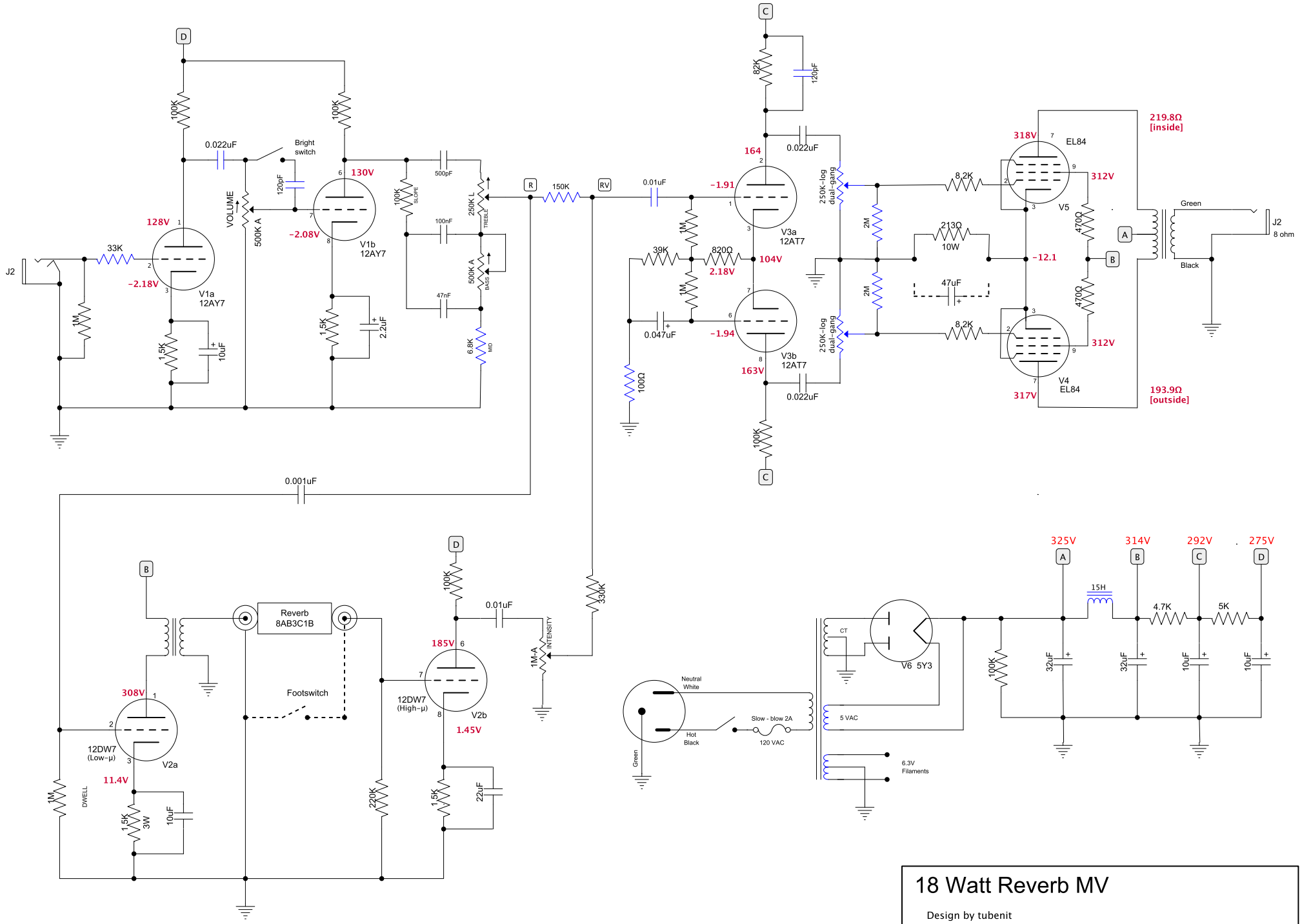

18 Watt Reverb MV

Design by tubenit

07/10/2024	AO-43 transformers