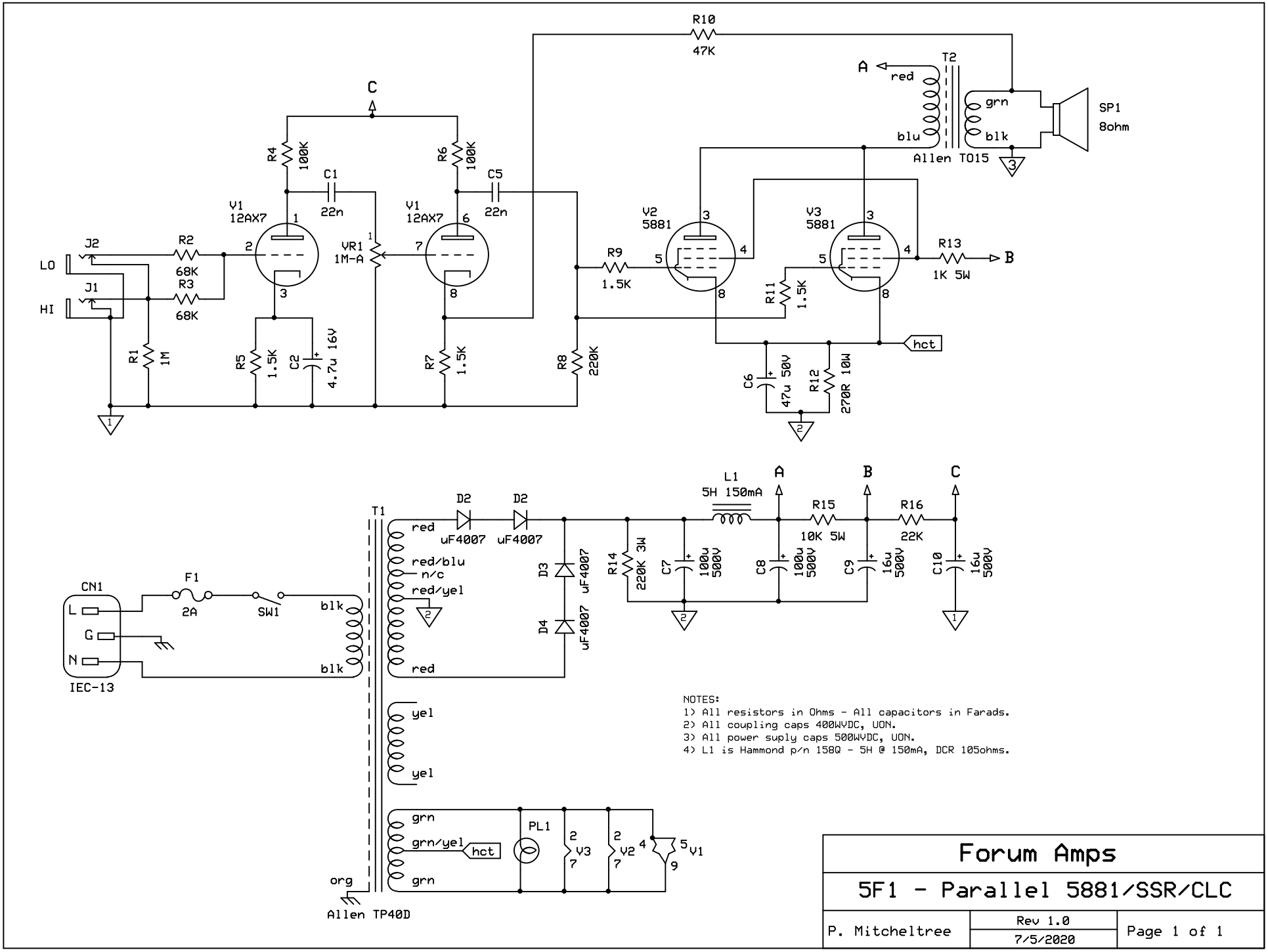

NOTES:
1) All resistors in Ohms - All capacitors in Farads.
2) All coupling caps 400WVDC, UON.
3) All power suply caps 500WVDC, UON.
4) L1 is Hammond p/n 158Q - 5H @ 150mA, DCR 105ohms.

Forum Amps		
5F1 - Parallel 5881/SSR/CLC		
P. Mitcheltree	Rev 1.0 7/5/2020	Page 1 of 1