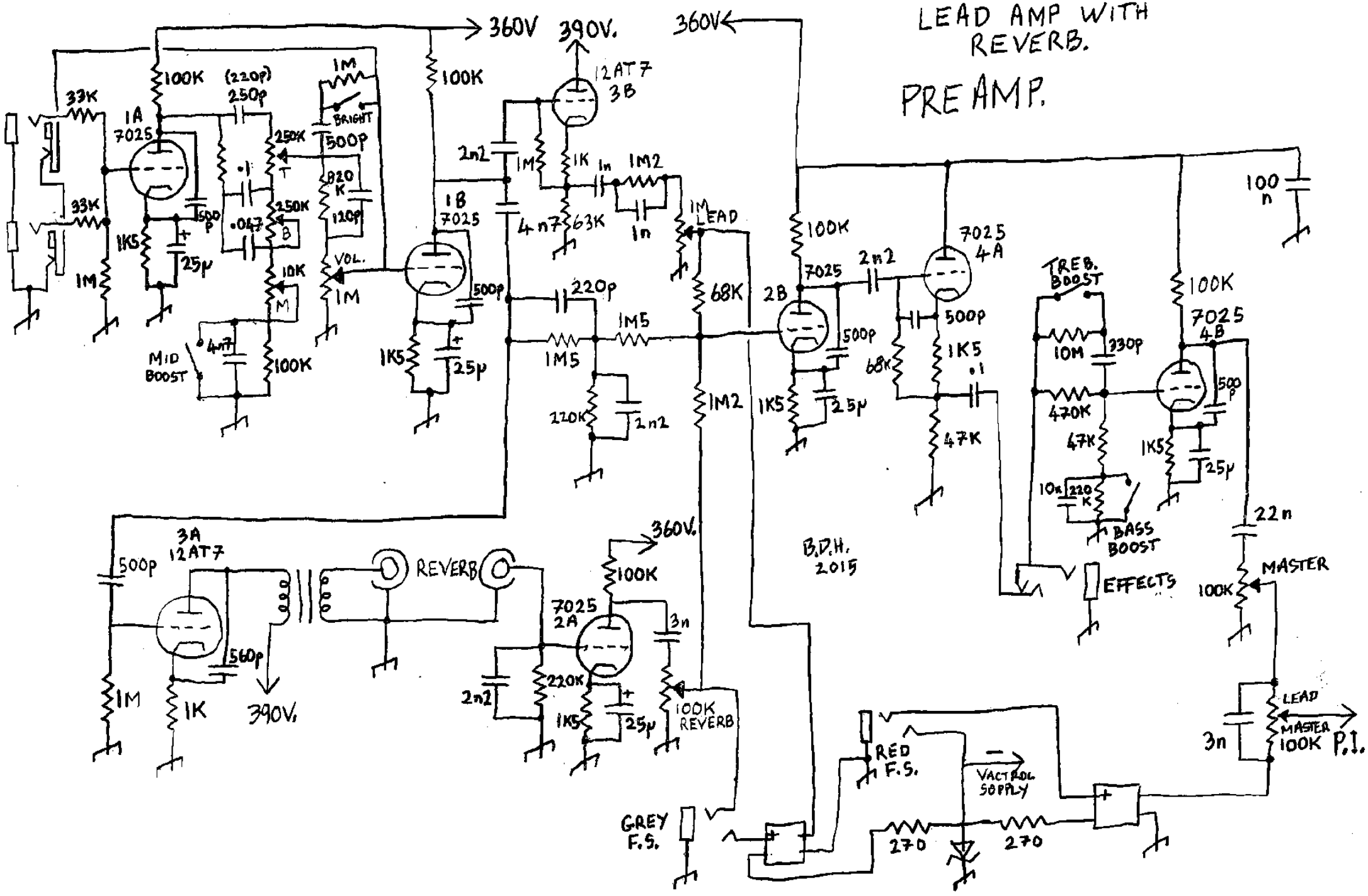FENDER 75W.
LEAD AMP WITH REVERB.
PREAMP.