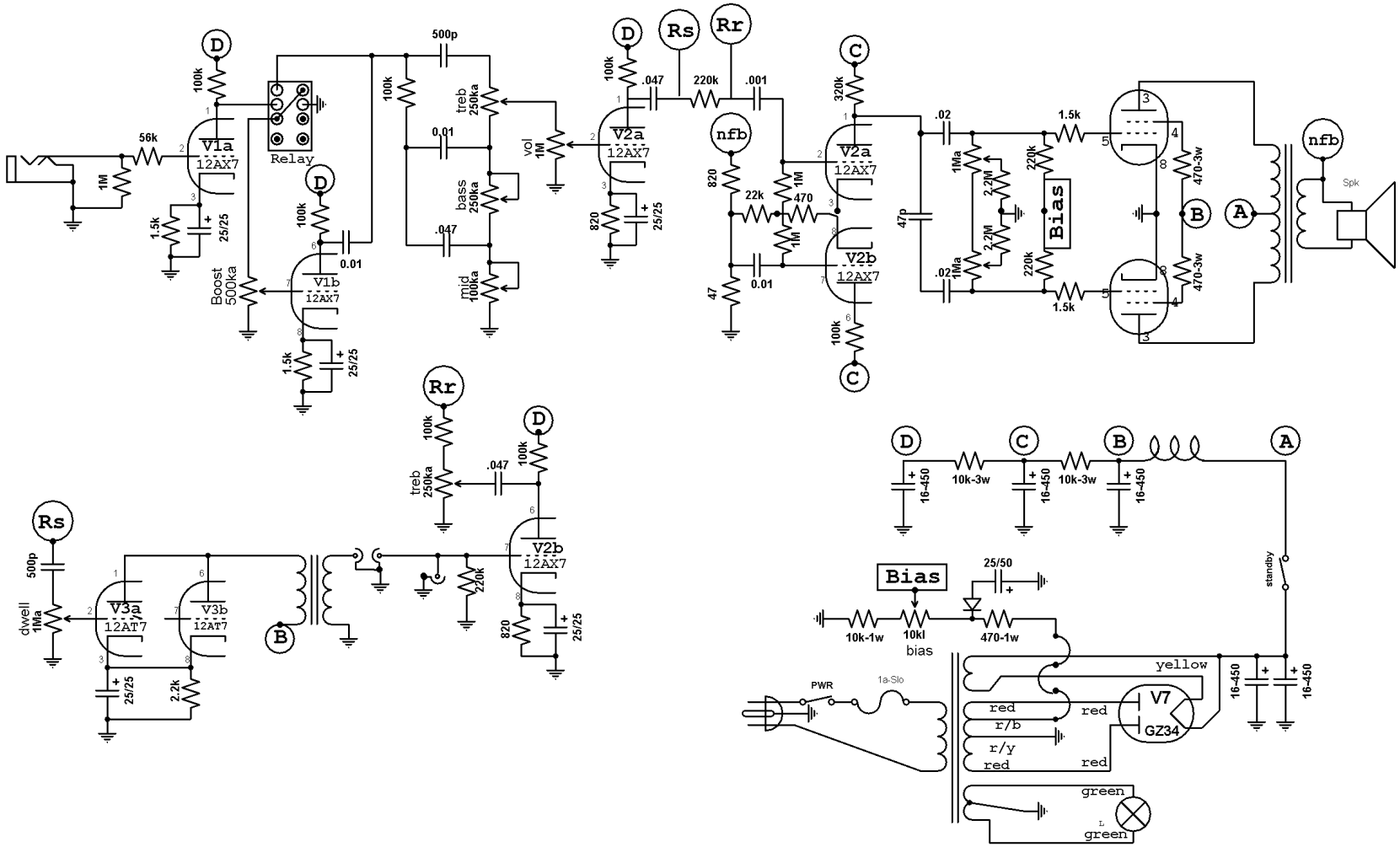

Sandhills String Workshop		
Prince-D-Lux		
rake	Rev 1.0 2024-09-14	Page #1