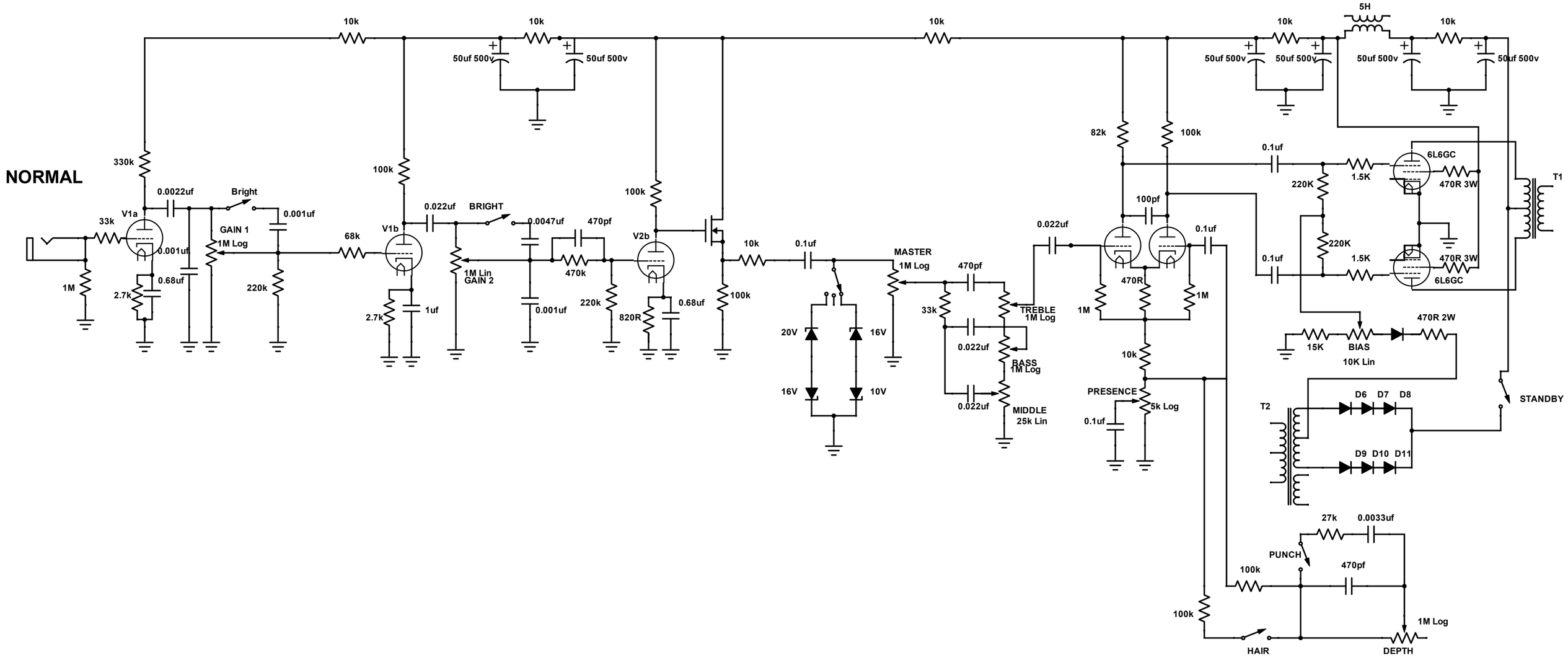
NORMAL
10k
10k
10k
10k
10k
5H
50uf 500v
50uf 500v
50uf 500v
50uf 500v
50uf 500v
50uf 500v
330k
0.0022uf
Bright
V1a
33k
0.001uf
GAIN 1
1M Log
0.001uf
1M
0.68uf
2.7k
220k
100k
68k
V1b
0.022uf
BRIGHT
0.0047uf
470pf
1M Lin
GAIN 2
470k
2.7k
1uf
0.001uf
100k
V2b
220k
820R
0.68uf
10k
0.1uf
100k
20V
16V
16V
10V
MASTER
1M Log
470pf
33k
0.022uf
TREBLE
1M Log
BASS
1M Log
0.022uf
MIDDLE
25k Lin
82k
100k
0.1uf
100pf
0.022uf
0.1uf
470R
1M
1M
10k
PRESENCE
5k Log
0.1uf
220K
1.5K
6L6GC
470R 3W
220K
0.1uf
1.5K
470R 3W
6L6GC
T1
15K
BIAS
10K Lin
470R 2W
T2
D6
D7
D8
D9
D10
D11
STANDBY
27k
0.0033uf
PUNCH
470pf
100k
100k
1M Log
HAIR
DEPTH