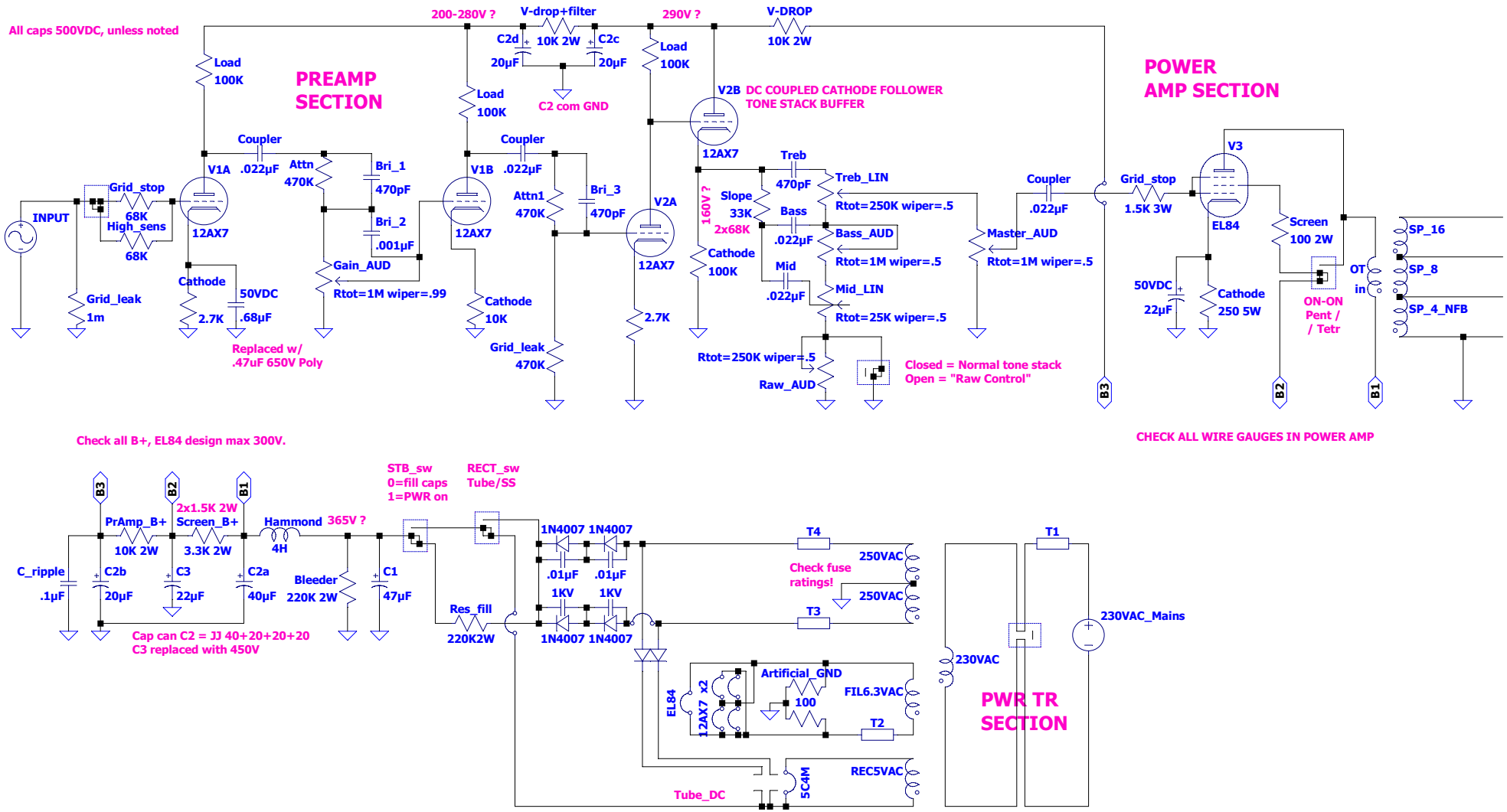
All caps 500VDC, unless noted
PREAMP SECTION
200-280V ?
V-drop+filter
10K 2W
C2d
20µF
C2c
20µF
C2 com GND
290V ?
V-DROP
10K 2W
Load
100K
V2B DC COUPLED CATHODE FOLLOWER
TONE STACK BUFFER
12AX7
POWER AMP SECTION
INPUT
Grid_stop
68K
High_sens
68K
V1A
12AX7
Coupler
.022µF
Attn
470K
Bri_1
470pF
Bri_2
.001µF
Gain_AUD
Rtot=1M wiper=.99
Cathode
2.7K
50VDC
.68µF
Grid_leak
1m
Replaced w/
.47uF 650V Poly
V1B
12AX7
Attn1
470K
Bri_3
470pF
Cathode
10K
Grid_leak
470K
V2A
12AX7
2.7K
160V ?
Cathode
100K
Treb
470pF
Slope
33K
2x68K
Bass
.022µF
Mid
.022µF
Treb_LIN
Rtot=250K wiper=.5
Bass_AUD
Rtot=1M wiper=.5
Mid_LIN
Rtot=25K wiper=.5
Rtot=250K wiper=.5
Raw_AUD
Closed = Normal tone stack
Open = "Raw Control"
Master_AUD
Rtot=1M wiper=.5
B3
V3
EL84
1.5K 3W
Screen
100 2W
50VDC
22µF
Cathode
250 5W
ON-ON
Pent /
/ Tetr
OT
in
SP_16
SP_8
SP_4_NFB
B2
B1
Check all B+, EL84 design max 300V.
CHECK ALL WIRE GAUGES IN POWER AMP
STB_sw
0=fill caps
1=PWR on
RECT_sw
Tube/SS
PrAmp_B+
10K 2W
2x1.5K 2W
Screen_B+
3.3K 2W
Hammond
4H
365V ?
C_ripple
.1µF
C2b
20µF
C3
22µF
C2a
40µF
Bleeder
220K 2W
C1
47µF
Cap can C2 = JJ 40+20+20+20
C3 replaced with 450V
Res_fill
220K2W
1N4007 1N4007
.01µF .01µF
1KV 1KV
1N4007 1N4007
T4
250VAC
Check fuse
ratings!
250VAC
T3
Artificial_GND
100
FIL6.3VAC
T2
EL84
12AX7 x2
REC5VAC
5C4M
Tube_DC
230VAC
T1
230VAC_Mains
PWR TR SECTION